Appendix E. Engineering Drawings
(Part 6 of 10)

This page is intentionally left blank.

NORTHERN INDIANA COMMUTER TRANSPORTATION DISTRICT

WEST LAKE CORRIDOR
MILEPOST 61.38 TO MILEPOST 69.18
DYER TO HAMMOND, INDIANA

SYSTEM PLANS

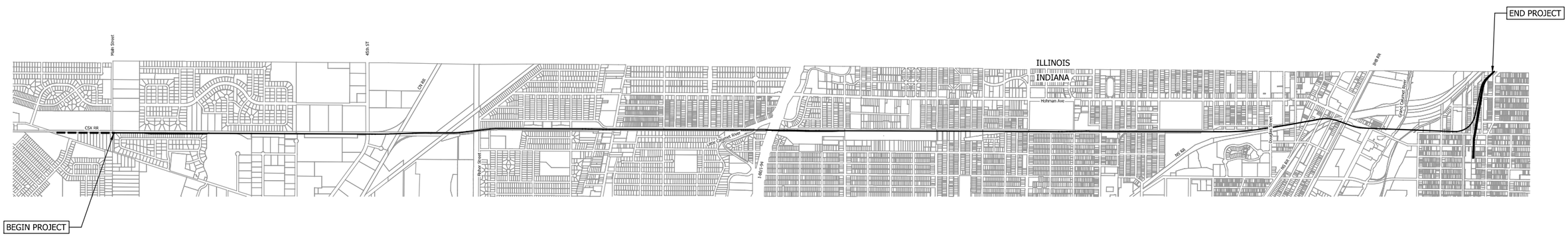

PROJECT MAP
Not to Scale

NOT FOR CONSTRUCTION

SERIES STGN-01 OF STGN-02

JKCELLMA

PLOT DATE: 7/20/2017 12:29:28 PM

HDR Engineering, Inc.
8550 W Bryn Mawr Ave., Suite 900
Chicago, IL 60631

www.hdrinc.com

ISSUE	DATE	DESCRIPTION

NICTD
NORTHERN INDIANA COMMUTER TRANSPORTATION DISTRICT
33 East Highway 12
Chesterton, Indiana 46304

WEST LAKE CORRIDOR
DYER TO HAMMOND, INDIANA

DESIGNED:
DRAWN:
CHECKED:
DATE: 07/21/17

NICTD - WEST LAKE CORRIDOR - MP WL 61.38 TO WL 69.18
SINGLE TRACK

COVER SHEET

FILENAME _SHT_WL_OCS_CV_00A_Cover.dgn
SCALE AS NOTED

SHEET 1 OF 248

SHEET INDEX

General

1	STGN-01	COVER SHEET
2	STGN-02	SHEET INDEX

Systems

3 - 14	SYSGN-1 - SYSGN-12	CATENARY GENERAL
15 - 52	SYSPL-1 - SYSPL-38	CATENARY PLANS
53 - 105	SYSDT-1 - SYSDT-53	CATENARY DETAILS
106 - 108	CSGGN-1 - CSGGN-3	SIGNAL GENERAL
109 - 114	CSGPL-1 - CSGPL-6	SIGNAL CONTROL LINES
115 - 128	CSGPL-7 - CSGPL-20	SIGNAL BLOCK VALIDATION
129 - 143	CSGPL-21 - CSGPL-35	SIGNAL LOCATION PLANS
144 - 177	CSGDT-1 - CSGDT-34	SIGNAL TYPICAL DETAILS
178 - 183	CSGDT-35 - CSGDT-41	COMMUNICATION TYPICAL DETAILS
185 - 199	CSGCB-1 - CSGCB-15	FIBER OPTIC CABLE LAYOUT PLANS
200 - 201	TPGN-1 - TPGN-2	TRACTION POWER GENERAL
202	TPKP-1	TRACTION POWER KEY PLAN
203 - 216	TPSL1-1 - TPEL1-8	TRACTION POWER SUBSTATION NO. 1
217 - 230	TPSL2-1 - TPEL2-8	TRACTION POWER SUBSTATION NO. 2
231 - 244	TPSL1-1 - TPEL3-8	TRACTION POWER SUBSTATION NO. 3
245 - 247	TPDT-1 - TPDT-3	TRACTION POWER DETAILS
248	TPPL4-1	M&SF TRACTION POWER PLAN AND DETAILS

JKOELLMA

PLOT DATE: 7/21/2017 1:29:56 PM

HDR Engineering, Inc.
8550 W Bryn Mawr Ave., Suite 900
Chicago, IL 60631

www.hdrinc.com

ISSUE	DATE	DESCRIPTION

NORTHERN INDIANA COMMUTER TRANSPORTATION DISTRICT
33 East Highway 12
Chesterton, Indiana 46304

DYER TO HAMMOND, INDIANA

DESIGNED:
DRAWN:
CHECKED:
DATE: 07/21/17

NOT FOR CONSTRUCTION

SERIES STGN-02 OF STGN-02

NICTD - WEST LAKE CORRIDOR - MP WL 61.38 TO WL 69.18
SINGLE TRACK

SHEET INDEX

FILENAME _SHT_WL_OCS_CV_01A_Index.dgn
SCALE AS NOTED

SHEET **2 OF 248**

GENERAL:

1. THIS NORTHERN INDIANA COMMUTER TRANSPORTATION DISTRICT (NICTD) "CATENARY DESIGN PACKAGE" IS FOR ELECTRIC TRACTION DISTRIBUTION WORK REQUIRED OVER THE NEW MAINLINE WEST LAKE BETWEEN MILE POST 61.38 TO 69.18 AND INTERFACES TO NEW SIDINGS, MAINTENANCE FACILITY, AND LAYOVER FACILITY.
2. THE CONTRACT PLANS OUTLINE THE DESIGN AND DIMENSIONAL REQUIREMENTS FOR THE INSULATED ASSEMBLIES AND COMPONENTS TO BE FURNISHED FOR THE PROPOSED WEST LAKE CORRIDOR SINGLE TRACK. THE CONFIGURATION OF ASSEMBLIES AND THE RELATIONSHIP OF ASSOCIATED COMPONENTS ARE ILLUSTRATED IN THE PLANS AND ASSEMBLY DRAWINGS AS AN INDICATION OF AVAILABLE, SERVICE PROVEN COMPONENTS THAT WILL PERFORM THE FUNCTION REQUIRED. WHENEVER AN ARTICLE OR MATERIAL IS DEFINED OR THE NAME OF MANUFACTURER OR VENDOR IS IDENTIFIED, SUCH REFERENCE HAS BEEN MADE FOR THE PURPOSE OF INDICATING THE STANDARD OF QUALITY REQUIRED BY NICTD. ALL SUPPLIER AND MATERIALS SHALL BE SUBJECT TO APPROVAL OF NICTD AND ENGINEER.
3. ASSEMBLY AND STRUCTURE ALLOCATIONS ILLUSTRATED IN THE PACKAGE REFER TO STANDARD ARRANGEMENTS AS DETAILED IN THESE DRAWINGS.
4. THE CONTRACTOR SHALL USE REASONABLE AND ACCEPTABLE INDUSTRY PRACTICES AND CONSTRUCTION PROCEDURES, AND FOLLOW RECOMMENDED MANUFACTURER PROCEDURES DURING THE CATENARY INSTALLATION.
5. THE CONTRACTOR SHALL FIELD VERIFY ALL DIMENSIONS NECESSARY FOR CONSTRUCTION PRIOR TO COMMENCING FABRICATION AND INSTALLATION.
6. BEFORE COMMENCEMENT OF WORK THE CONTRACTOR SHALL ESTABLISH THE EXACT SEQUENCE AND PROCEDURES TO BE UTILIZED BASED ON MANPOWER, EQUIPMENT MATERIAL AND TRACK AVAILABILITY AND SUBMIT A PLAN OF CONSTRUCTION.
7. THE CONTRACTOR SHALL FIELD CHECK ENTIRE WORK AREA OF THIS PROJECT FOR ACCESSIBLE, SAFETY AND LOCATION OF POSSIBLE OBSTRUCTIONS.
8. PRIOR TO EXCAVATION OR ANY OTHER CONSTRUCTION ACTIVITY THAT MAY DAMAGE SUBSURFACE UTILITIES, PROPER UTILITY ONE CALL PROCEDURES MUST BE FOLLOWED.
9. THE CONTRACTOR SHALL REMOVE, RELOCATE OR OTHERWISE MODIFY EXISTING WIRES AND ATTACHMENTS AS NECESSARY TO ACCOMMODATE THE NEW CATENARY INSTALLATION.
10. ALL LOADS INDICATED IN THE DRAWINGS ARE ACTUAL WORST CASE WORKING LOADS (NO SAFETY FACTORS HAVE BEEN ADDED)

LAYOUTS:

1. HEIGHTS SHOWN ARE RELATIVE TO HIGH RAIL LEVEL (HRL) AT THE LOCATION INDICATED.
2. STATIONING IS BASED ON BASELINE CHANGE IN FEET.
3. THE CENTERLINE OF TRACK TO FACE OF POLE DIMENSION SHOWN IS THE HORIZONTAL DISTANCE MEASURED PERPENDICULAR FROM THE CENTERLINE OF THE TRACK TO THE FACE OF CATENARY POLE.
4. CATENARY AND STRUCTURAL MATERIAL IS ALLOCATED ON THE CATENARY LAYOUT PLAN.
5. WIRE STAGGERS SHOWN ARE RELATIVE TO SUPER ELEVATED TRACK CENTERLINE (PROJECTED CENTERLINE OF STATIC PANTOGRAPH) OF THE MAINLINE SERVED.

STEEL STRUCTURES:

1. STRUCTURAL STEEL SHALL BE ASTM A-992 UNLESS OTHERWISE NOTED.
2. STRUCTURAL STEEL SHALL BE HOT DIPPED GALVANIZED IN ACCORDANCE WITH ASTM A-123.
3. FIELD CONNECTIONS SHALL BE BOLTED UNLESS OTHERWISE NOTED.
4. DESIGN, DETAILING, FABRICATION AND ERECTION OF STRUCTURAL STEEL SHALL BE IN ACCORDANCE WITH THE AISC MANUAL OF STEEL CONSTRUCTION, LATEST EDITION.
5. WELDING SHALL CONFORM TO STRUCTURAL WELDING CODE, AWS D.1.1. LATEST EDITION, ELECTRODES SHALL BE E70-XX.
6. BOLTS SHALL BE ASTM A325 HEXAGONAL HEAD, COMPLETE WITH HEX NUT AND FLAT (PLAIN) WASHER, AND SHALL BE GALVANIZED IN ACCORDANCE WITH ASTM 153.
7. SIZE OF BOLT HOLES SHALL BE 1/16" LARGER THAN BOLT DIAMETER, UNLESS OTHERWISE NOTED.
8. LOADS GENERATED BY ATTACHMENT OF FUTURE FACILITIES TO THE STRUCTURES HAVE NOT BEEN ACCOUNTED FOR IN THE DESIGN.

WOOD STRUCTURES:

1. WOOD POLES SPECIFIED FOR NICTD FACILITIES ONLY SHALL BE SOUTHERN YELLOW PINE, CLASS H. ALL WOOD POLES SHALL BE PRESSURE TREATED FULL LENGTH, CONFORMING TO ANSI SPECIFICATION 05.1, LATEST ISSUE. PREPARATION AND METHOD OF TREATMENT SHALL CONFORM TO AWPA SPECIFICATION C1 & C4.
2. ALL WOOD POLES TO HAVE VISIBLE MARKER REPRESENTING THE TOP OF RAIL (T/R) ELEVATION. DRILLING OF HOLES IN POLES SHALL BEGIN FROM THE TOP OF POLE AND SHALL BE REFERENCED TO THE TOP OF RAIL. EXCESS LENGTH OF POLES SHALL BE CUT FROM TOP.

FOUNDATIONS:

1. CONCRETE WORK SHALL BE IN ACCORDANCE WITH THE AMERICAN CONCRETE INSTITUTE BUILDING CODE REQUIREMENTS.
2. CONCRETE SHALL DEVELOP A MINIMUM COMPRESSION STRENGTH OF 4000 PSI AFTER 28 DAYS.
3. REINFORCING STEEL SHALL CONFORM TO ASTM A615 GRADE 60 UNLESS OTHERWISE NOTED.
4. REINFORCEMENT DETAILS SHALL CONFORM TO THE REQUIREMENTS OF THE ACI MANUAL OF STANDARD PRACTICE FOR DETAILING REINFORCED CONCRETE STRUCTURES.
5. EMBEDDED STEEL WORK SHALL HAVE A MINIMUM CLEAR CONCRETE COVER OF 3".
6. STEEL/CONCRETE INTERFACES SHALL HAVE SEALANT APPLIED IN ACCORDANCE WITH THE CONTRACT SPECIFICATION.

ASSEMBLY/STANDARDS:

1. ASSEMBLY NUMBERS ARE DEVELOPED USING A DRAWING NUMBER PREFIX AND NUMBER SUFFIX.

   EXAMPLE: 401-1 PULL-OFF SINGLE TRACK CANTILEVER

2. COMPONENT/HARDWARE INSTALLATION SHALL BE IN ACCORDANCE WITH THE MANUFACTURE'S RECOMMENDED PROCEDURES AND THE STANDARD DRAWINGS.

NOT FOR CONSTRUCTION

SERIES SYSGN-1 OF SYSGN-12

ABBREV.	MEANING
ABUT	ABUTMENT
ACI	AMERICAN CONCRETE INSTITUTE
ACSR	ALUMINUM CABLE STEEL REINFORCED
AISC	AMERICAN INSTITUTE OF STEEL CONSTRUCTION
ASSY	ASSEMBLY
ASTM	AMERICAN SOCIETY FOR TESTING & MATERIALS
A.T.	AUTO-TENSIONED
AWG	AMERICAN WIRE GAUGE
AWS	AMERICAN WELDING SOCIETY
@	AT
BO	BAD ORDER
BR	BRIDGE
BTM	BOTTOM
BWA	BALANCE WEIGHT ASSEMBLY
BZ.	BRONZE
CANT	CANTILEVER
CAT	CATENARY
CFW	CATENARY FEEDER WIRE
CL	CENTERLINE
CLR	CLEARANCE, CLEAR
COMM	COMMUNICATIONS
CONC	CONCRETE
COND	CONDUCTOR
CU	COPPER
DE	DEAD END
DEG,°	DEGREE
DGA	DOWN GUY ANCHOR
DIA, Ø	DIAMETER
DWG	DRAWING
EB	EAST BOUND
ELEC	ELECTRIC, ELECTRICAL
EL	ELEVATION
EQUIP	EQUIPMENT
ES	ELEVATED STRUCTURE
EXIST	EXISTING
FND	FOUNDATION
°F	DEGREE FAHRENHEIT
FT, '	FOOT, FEET
FA	FIXED ANCHOR
GALV	GALVANIZED
GRD	GROUND
GRS	GALVANIZED RIGID STEEL
GW	GROUND WIRE (AERIAL)
HO	HAND OPERATED
HD	HARD DRAWN
HORZ	HORIZONTAL HIGH
HRL	HIGH RAIL LEVEL
HT	HEIGHT
HSSI	HIGH SPEED SECTION INSULATOR
ID	INSIDE DIAMETER
IN, "	INCH
INCL	INCLUDING
IR	IN RUNNING (RIDING TROLLEY)

ABBREV.	MEANING
KV	KILOVOLT
KVA	KILOVOLT AMPERE
LB	POUND
LG	LONG
LO	LAYOVER
LOC	LOCATION
LSSI	LOW SPEED SECTION INSULATOR
MAX	MAXIMUM
MCM	THOUSAND CIRCULAR MILS
MESS	MESSENGER
MIN	MINIMUM
MISC	MISCELLANEOUS
MO	MOTOR OPERATED
MOW	MAINTENANCE OF WAY
MP	MILE POST
MPA	MID-POINT ANCHOR
N/A	NOT APPLICABLE
NIC	NOT IN CONTACT
NICTD	NORTHERN INDIANA COMMUTER TRANSPORTATION DISTRICT
NO, #	NUMBER
NOM	NOMINAL
NR	NOT REGISTERED
NSR	NOT SUPPORTED OR REGISTERED
NTS	NOT TO SCALE
OC	ON CENTER
OD	OUTSIDE DIAMETER
O/H	OVERHEAD
OOR	OUT OF RUNNING (NON-RIDING TROLLEY)
PAN	PANTOGRAPH
PC	POINT OF CURVE
PL	PLATE, PROPERTY LINE
PROP	PLAN OF CONSTRUCTION
POC	PROPOSED
PS	POINT OF SWITCH
PSI	POUND PER SQUARE INCH
PT	POINT OF TANGENT
PUB	PUBLIC
PVT	PRIVATE
R	RADIUS (CURVE, DETAIL)
REF	REFERENCE
REQ'D	REQUIRED
ROW	RIGHT OF WAY
RTU	REMOTE TERMINAL UNIT
RR	RAIL ROAD
RW	RETAINING WALL
SDG	SIDING
SECT	SECTION
SIG	SIGNAL
SQ	SQUARE
SSL	SOUTH SHORE LINE
STA	STATION (LOCATION, BUILDING)
STRD	STRANDED
SP	SIGNAL POWER

ABBREV.	MEANING
STR	STRUCTURE
SUB	SUBSTATION
SW	SWITCH
TBR	TO BE REMOVED
TEMP	TEMPORARY
TERM	TERMINATION
TO	TURNOUT
TRK	TRACK
TWA	TIE WIRE ANCHOR
TYP	TYPICAL
U/G	UNDERGRADE, UNDERGROUND
UTL	UTILITY
UON	UNLESS OTHERWISE NOTED
VERT	VERTICAL
WB	WEST BOUND
WRA	WASH RUN-AROUND
X/O	CROSSOVER
Y	YARD
YL	YARD LEAD

NOTES:

1. ABBREVIATIONS NOT SHOWN HERE MAY BE FOUND ON SPECIFIC DRAWINGS WHERE USED.

NOT FOR CONSTRUCTION

SERIES SYSGN-2 OF SYSGN-12

JKELLMA

PLOT DATE: 7/19/2017 8:55:34 PM

HDR Engineering, Inc.
8550 W Bryn Mawr Ave., Suite 900
Chicago, IL 60631
www.hdrinc.com

Burns
BURNS ENGINEERING, INC. | 215 979-7700
TWO COMMERCE SQUARE, 2001 MARKET ST, SUITE 600
PHILADELPHIA, PA 19103

ISSUE	DATE	DESCRIPTION

NICTD
NORTHERN INDIANA COMMUTER TRANSPORTATION DISTRICT
33 East Highway 12
Chesterton, Indiana 46304

WEST LAKE CORRIDOR
DYER TO HAMMOND, INDIANA

DESIGNED:	RSW
DRAWN:	MJA
CHECKED:	MP
DATE:	07/21/17

NICTD - WEST LAKE CORRIDOR - MP WL 61.38 TO WL 69.18
SINGLE TRACK

ABBREVIATIONS SYSTEM

FILENAME	SHT_WL_OCS_GN_004.dgn
SCALE	AS NOTED

SHEET 4 OF 248

IN LINE INSULATOR
(NON-RIDING WIRE)

UNINSULATED OVERLAP
(OVERLAP)

INSULATED OVERLAP
(OVERLAP)

1000 MCM FEEDER

CATENARY JUMPER
(FULL FEEDING)

CATENARY JUMPER
(IN SPAN)

CATENARY JUMPER
(POTENTIAL EQUALIZING)

DISCONNECT SWITCH
(HAND OPERATED NORMALLY OPEN)

DISCONNECT SWITCH (HAND
OPERATED NORMALLY CLOSED)

SECTION INSULATOR

INSULATED OVERLAP

NICTD CATENARY WOOD POLE

NICTD CATENARY STEEL POLE

WIDE-FLANGE (WF) POLE

HIGH RAIL LEVEL

HRL

HEIGHT RELATIVE TO
HIGH RAIL LEVEL

23'-6"

ELECTRIFIED TRACK

MILE POST

MP

STATION EQUATION

CENTER LINE
(TRACK, POLE, WIRE,
ASSEMBLY, LOCATION)

SECTION LINE
(MATCH LINE)

CULVERT

UTILITY CROSSING

GRADE CROSSING

OVERHEAD BRIDGE

UNDERGRADE BRIDGE

STUB TRACK

PASSENGER STATION

P

SUBSTATION

SUB

CIRCUIT BREAKER

GUY ANCHOR

DOUBLE GUY ANCHOR

WF BEAM FOR WOOD POLE

WF BEAM FOR STEEL POLE

STEEL TRUSS STRUCTURE

TRUSS POLE

SIGNAL CASE

SC

STAGGER & DIRECTION

#"

LIGHTNING ARRESTER

CAPACITOR

HOOK STICK DISCONNECT SWITCH

GROUND

INSULATOR

SIGNAL POWER TRANSFORMER

NOTES:

1. SYMBOLS REQUIRED NOT SHOWN HERE MAY BE FOUND ON SPECIFIC DRAWINGS WHERE USED.
2. SYMBOLS SHOWN IN BACKGROUND ARE EXISTING UNLESS OTHERWISE NOTED.

NOT FOR CONSTRUCTION

SERIES SYSGN-3 OF SYSGN-12

JKELLMA

PLOT DATE: 7/19/2017 8:55:48 PM

HDR Engineering, Inc.
8550 W Bryn Mawr Ave., Suite 900
Chicago, IL 60631

www.hdrinc.com

Burns
BURNS ENGINEERING, INC. | 215 979-7700
TWO COMMERCE SQUARE, 2001 MARKET ST, SUITE 600
PHILADELPHIA, PA 19103

ISSUE	DATE	DESCRIPTION

NICTD
NORTHERN INDIANA COMMUTER
TRANSPORTATION DISTRICT
33 East Highway 12
Chesterton, Indiana 46304

WEST LAKE CORRIDOR
DYER TO HAMMOND, INDIANA

DESIGNED:	RSW
DRAWN:	MJA
CHECKED:	MP
DATE:	07/21/17

NICTD - WEST LAKE CORRIDOR - MP WL 61.38 TO WL 69.18
SINGLE TRACK

SYMBOLS (1 OF 2)
SYSTEM

FILENAME	SHT_WL_OCS_GN_005.dgn	SHEET 5 OF 248
SCALE	AS NOTED	

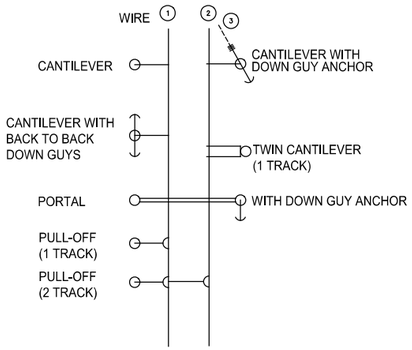

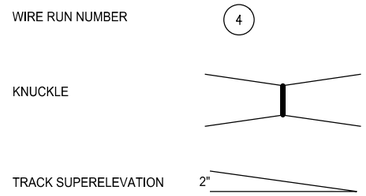

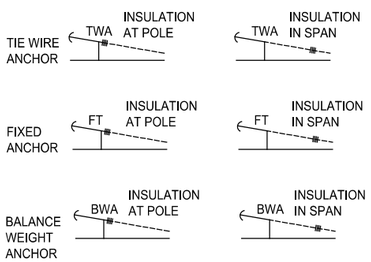

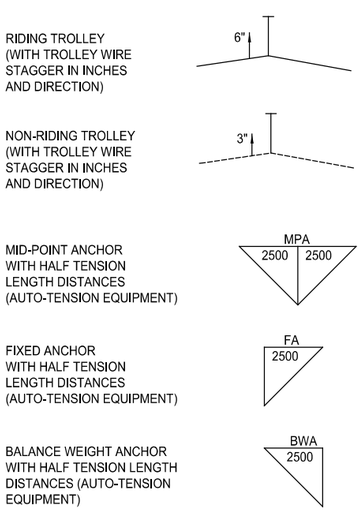

NOTES:

1. SYMBOLS REQUIRED NOT SHOWN HERE MAY BE FOUND ON SPECIFIC DRAWINGS WHERE USED.

NOT FOR CONSTRUCTION

SERIES SYSGN-4 OF SYSGN-12

JKIELLMA

PLOT DATE: 7/19/2017 8:55:58 PM

HDR Engineering, Inc.
8550 W Bryn Mawr Ave., Suite 900
Chicago, IL 60631
www.hdrinc.com

Burns
BURNS ENGINEERING, INC. | 215 979-7700
TWO COMMERCE SQUARE, 2001 MARKET ST, SUITE 600
PHILADELPHIA, PA 19103

ISSUE	DATE	DESCRIPTION

NICTD
NORTHERN INDIANA COMMUTER TRANSPORTATION DISTRICT
33 East Highway 12
Chesterton, Indiana 46304

WEST LAKE CORRIDOR
DYER TO HAMMOND, INDIANA

DESIGNED:	RSW
DRAWN:	MJA
CHECKED:	MP
DATE:	07/21/17

NICTD - WEST LAKE CORRIDOR - MP WL 61.38 TO WL 69.18
SINGLE TRACK

SYMBOLS (2 OF 2) SYSTEM

FILENAME	SHT_WL_OCS_GN_006.dgn	SHEET 6 OF 248
SCALE	AS NOTED	

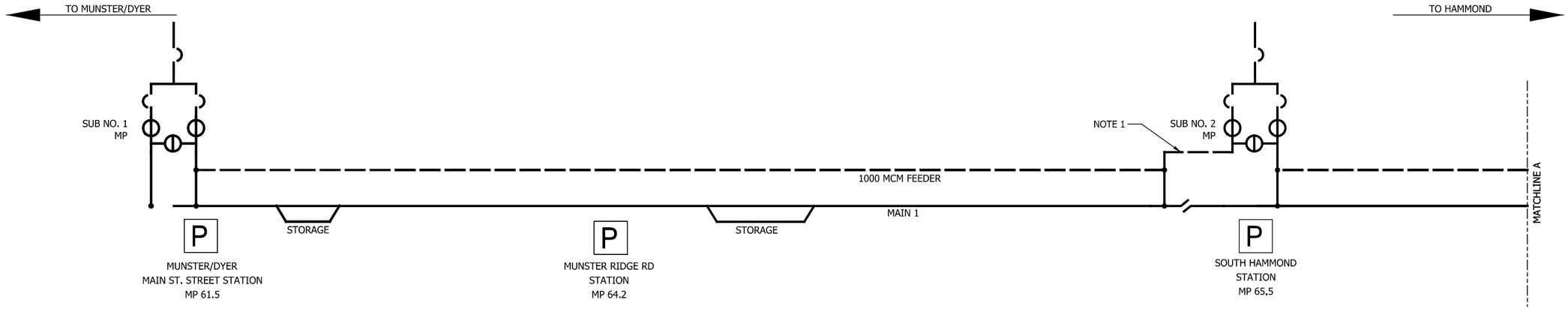

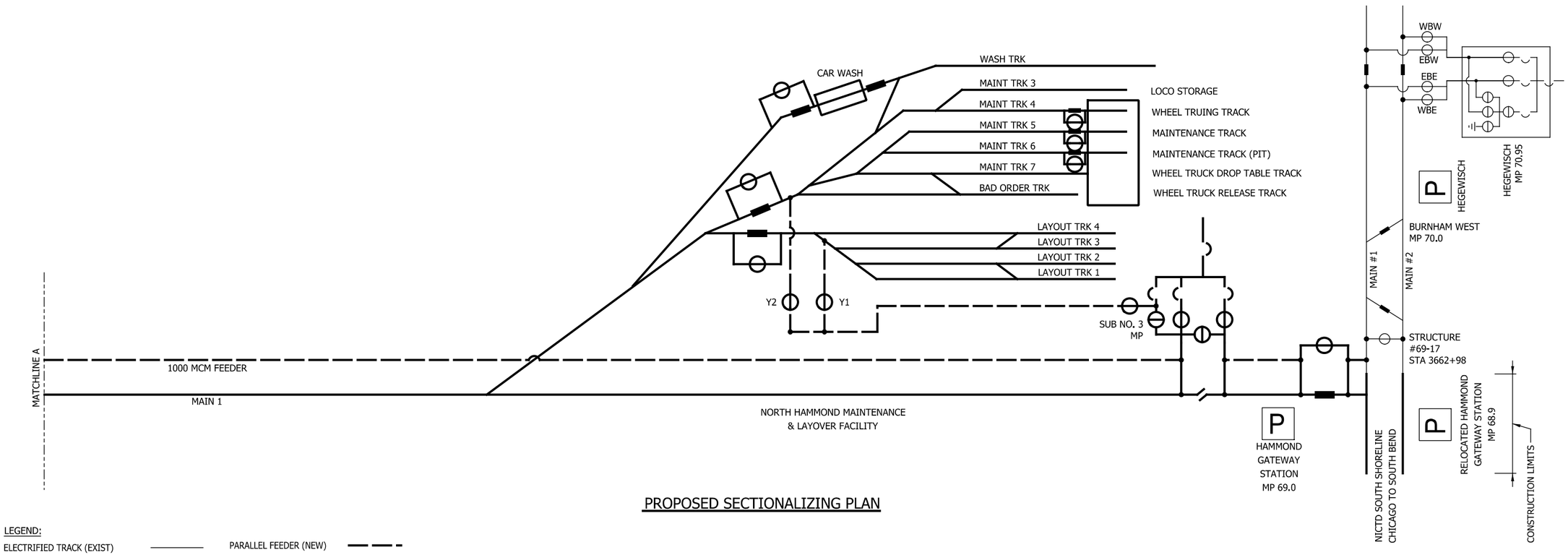

PROPOSED SECTIONALIZING PLAN

LEGEND:

- ELECTRIFIED TRACK (EXIST)
- ELECTRIFIED TRACK (NEW)
- PASSENGER STOP
- SECTION INSULATOR
- INSULATED OVERLAP
- PARALLEL FEEDER (NEW)
- SWITCH N.C.
- SWITCH N.O.

NOTE:

1. NO FEEDER TAPS BETWEEN FEEDER WIRE AND CATENARY FROM AIR BREAK TO SUBSTATION #2.
2. SEE PLAN OF CONSTRUCTION, SYSGN-6 FOR SUBSTATION LOCATIONS AND ORIENTATION.

NOT FOR CONSTRUCTION

SERIES SYSGN-5 OF SYSGN-12

JKIELLMA

PLOT DATE: 7/19/2017 8:56:12 PM

HDR Engineering, Inc.
8550 W Bryn Mawr Ave., Suite 900
Chicago, IL 60631
www.hdrinc.com

Burns
BURNS ENGINEERING, INC. | 215 979-7700
TWO COMMERCE SQUARE, 2001 MARKET ST, SUITE 600
PHILADELPHIA, PA 19103

ISSUE	DATE	DESCRIPTION

NICTD
NORTHERN INDIANA COMMUTER TRANSPORTATION DISTRICT
33 East Highway 12
Chesterton, Indiana 46304

WEST LAKE CORRIDOR
DYER TO HAMMOND, INDIANA

DESIGNED:	RSW
DRAWN:	VJC
CHECKED:	MP
DATE:	07/21/17

NICTD - WEST LAKE CORRIDOR - MP WL 61.38 TO 69.18
SINGLE TRACK

SECTIONALIZING SYSTEM

FILENAME	SHT_WL_OCS_GN_007.dgn	SHEET 7 OF 248
SCALE	AS NOTED	

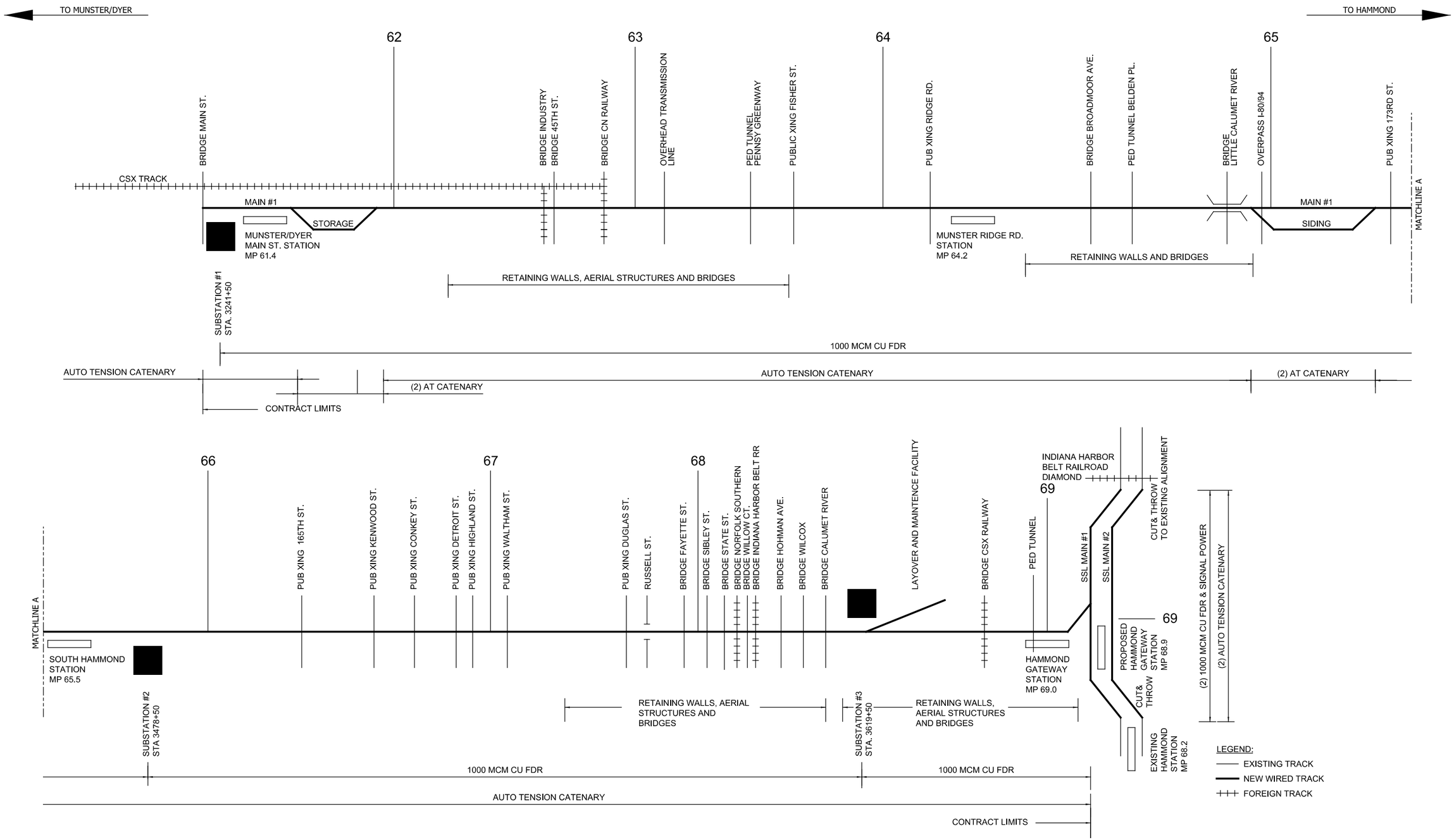

NOT FOR CONSTRUCTION

SERIES SYSGN-6 OF SYSGN-12

HDR Engineering, Inc.
8550 W Bryn Mawr Ave., Suite 900
Chicago, IL 60631
www.hdrinc.com

Burns
BURNS ENGINEERING, INC. | 215 979-7700
TWO COMMERCE SQUARE, 2001 MARKET ST, SUITE 600
PHILADELPHIA, PA 19103

ISSUE	DATE	DESCRIPTION

NORTHERN INDIANA COMMUTER TRANSPORTATION DISTRICT
33 East Highway 12
Chesterton, Indiana 46304

WEST LAKE CORRIDOR
DYER TO HAMMOND, INDIANA

DESIGNED:	RSW
DRAWN:	MJA
CHECKED:	MP
DATE:	07/21/17

NICTD - WEST LAKE CORRIDOR - MP WL 61.38 TO 69.18
SINGLE TRACK

PLAN OF CONSTRUCTION SYSTEM

FILENAME	SHT_WL_OCS_GN_008.dgn	SHEET	8 OF 248
SCALE	AS NOTED		

PLOT DATE: 7/19/2017 8:56:26 PM JKELLMA

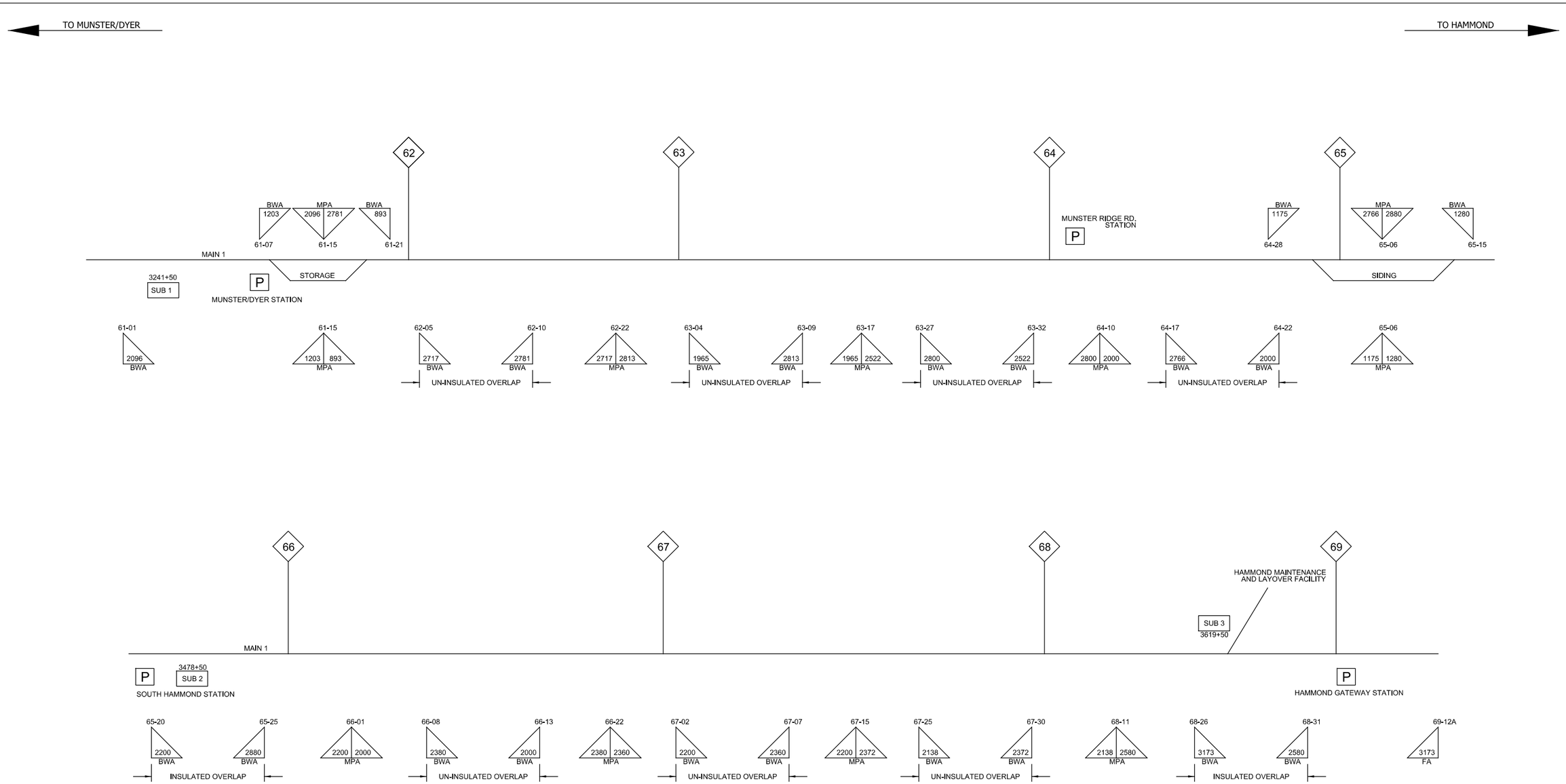

JKJELLMA

PLOT DATE: 7/19/2017 8:56:36 PM

NOT FOR CONSTRUCTION

SERIES SYSGN-7 OF SYSGN-12

HDR Engineering, Inc.
8550 W Bryn Mawr Ave., Suite 900
Chicago, IL 60631

www.hdrinc.com

Burns

BURNS ENGINEERING, INC. | 215 979-7700
TWO COMMERCE SQUARE, 2001 MARKET ST, SUITE 600
PHILADELPHIA, PA 19103

ISSUE	DATE	DESCRIPTION

NICTD
NORTHERN INDIANA COMMUTER TRANSPORTATION DISTRICT
33 East Highway 12
Chesterton, Indiana 46304

WEST LAKE CORRIDOR

DYER TO HAMMOND, INDIANA

DESIGNED: RSW
DRAWN: MJA
CHECKED: MP
DATE: 07/21/17

NICTD - WEST LAKE CORRIDOR - MP WL 61.38 TO WL 69.18
SINGLE TRACK

MASTER OVERLAP DIAGRAM SYSTEM

FILENAME: SHT_WL_OCS_GN_010.dgn
SCALE: AS NOTED
SHEET 9 OF 248

CONDUCTOR PARTICULARS	UNITS	SIMPLE CATENARY AUTO TENSION		YARD SIMPLE CATENARY FIXED TERMINATION	
		MESSENGER	CONTACT	MESSENGER	CONTACT
CONDUCTOR TYPE	--	0.613Ø TYPE E	335 MCM	0.613Ø TYPE E	335 MCM
MATERIAL	--	CW/CU COMPOSITE	BZ ALLOY 80	CW/CU COMPOSITE	BZ ALLOY 80
DIAMETER	IN.	0.613	0.68/0.482	0.613	0.68/0.482
CROSS SECTIONAL AREA	SQ. IN.	0.2239	0.2642	0.2239	0.2642
WEIGHT OF CONDUCTOR	LB/FT	0.8483	1.020	0.8483	1.020
WEIGHT OF SYSTEM	LB/FT	1.9883		1.9883	
RADIAL THICKNESS OF ICE	IN.	1/2	1/2	1/2	1/2
WEIGHT OF ICE	LB/FT	0.6923	0.6897	0.6923	0.6897
WEIGHT OF SYSTEM WITH ICE	LB/FT	3.370		3.370	
CONDUCTOR BREAKING LOAD	LB	20,730	15,010	20,730	15,010
CONDUCTOR TENSION AT:					
60°F NO WIND	LB	5000	5000	5000	5000
120°F NO WIND	LB	5000	5000	3585	2478
0°F AT 40 MPH WIND 1/2" RADIAL ICE	LB	6160	5000	7525	7535
-20°F NO ICE	LB	5900	5550	7474	8350
CONDUCTOR SAG ON 170' SPAN:					
60°F NO WIND	FT	1.44	--	1.44	--
120°F NO WIND	FT	1.44	--	2.00	--
0°F AT 40 MPH WIND 1/2" RADIAL ICE	FT	1.98	--	0.96	--
MODULUS OF ELASTICITY	PSI	1.95E+07	1.70E+07	1.95E+07	1.70E+07
COEFFICIENT OF LINEAR EXPANSION	-/°F	8.4E-06	9.4E-06	8.4E-06	9.4E-06
FACTOR OF SAFETY	--	3.37	2.70	2.75	1.80

BASED ON TYPICAL 170 FT SPANS.

CONDUCTOR PARTICULARS	UNITS/ COND.	FEEDER			SIGNAL POWER TAP
		F1	F2	F3	
MAXIMUM SPAN	FT	200	250	300	
CONDUCTOR TYPE	-	1000 MCM	1000 MCM	1000 MCM	#6 AWG
MATERIAL	-	STRD, HD, CU	STRD, HD, CU	STRD, HD, CU	HD, CU
DIAMETER	IN.	1.151	1.151	1.151	0.162
CROSS SECTIONAL AREA	SQ. IN.	0.7854	0.7854	0.7854	0.021
WEIGHT OF CONDUCTOR	LB/FT	3.088	3.088	3.088	0.0794
RADIAL THICKNESS OF ICE	IN.	1/2	1/2	1/2	1/2
WEIGHT OF ICE	LB/FT	1.027	1.027	1.027	0.412
WEIGHT OF SYSTEM WITH ICE	LB/FT	4.115	4.115	4.115	0.491
CONDUCTOR BREAKING LOAD	LB	45,030	45,030	45,030	1,280
CONDUCTOR TENSION AT:					
60 °F NO WIND	LB	3,200	5,000	7,500	175
120 °F NO WIND	LB	2,762	4,084	5,779	110
0 °F WIND AT 40 MPH WITH 1/2" RADIAL ICE	LB	5,079	8,232	12,310	670
CONDUCTOR SAG ON 170' SPAN:					
60 °F NO WIND	FT	4.82	4.82	4.63	1.64
120 °F NO WIND	FT	5.59	5.90	6.01	2.61
0 °F WIND AT 4O MPH WITH 1/2" RADIAL ICE	FT	4.115	3.97	3.82	3.41
MODULUS OF ELASTICITY	PSI	1.70E+07	1.70E+07	1.70E+07	1.70E+07
COEFFICIENT OF LINEAR EXPANSION	-/°F	9.40E-06	9.40E-06	9.40E-06	9.40E-06
FACTOR OF SAFETY		8.86	5.47	3.66	1.91

BASED ON MAXIMUM SPANS.

NOT FOR CONSTRUCTION

SERIES SYSGN-8 OF SYSGN-12

JKJELLMA

PLOT DATE: 7/19/2017 8:56:45 PM

HDR Engineering, Inc.
8550 W Bryn Mawr Ave., Suite 900
Chicago, IL 60631
www.hdrinc.com

Burns
BURNS ENGINEERING, INC. | 215 979-7700
TWO COMMERCE SQUARE, 2001 MARKET ST, SUITE 600
PHILADELPHIA, PA 19103

ISSUE	DATE	DESCRIPTION

NICTD
NORTHERN INDIANA COMMUTER TRANSPORTATION DISTRICT
33 East Highway 12
Chesterton, Indiana 46304

WEST LAKE CORRIDOR
DYER TO HAMMOND, INDIANA

DESIGNED: RSW
DRAWN: MJA
CHECKED: MP
DATE: 07/21/17

NICTD - WEST LAKE CORRIDOR - MP WL 61.38 TO WL 69.18
SINGLE TRACK

WIRE PARTICULARS SYSTEM

FILENAME SHT_WL_OCS_GN_020.dgn
SCALE AS NOTED

AUTO TENSION CATENARY
MAXIMUM SPAN LENGTH VS RADIUS AND DEGREE OF CURVE
FOR 22'-6" CONTACT WIRE HEIGHT

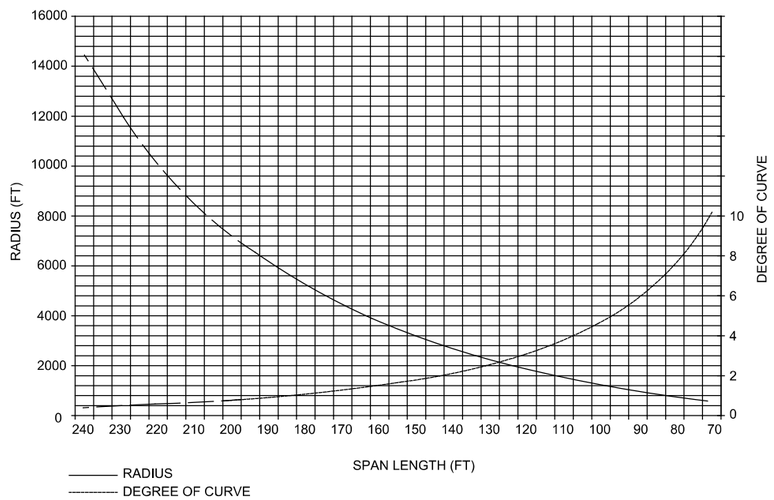

AUTO TENSION CATENARY
MAXIMUM SPAN LENGTH VS RADIUS AND DEGREE OF CURVE
FOR 19'-0" CONTACT WIRE HEIGHT

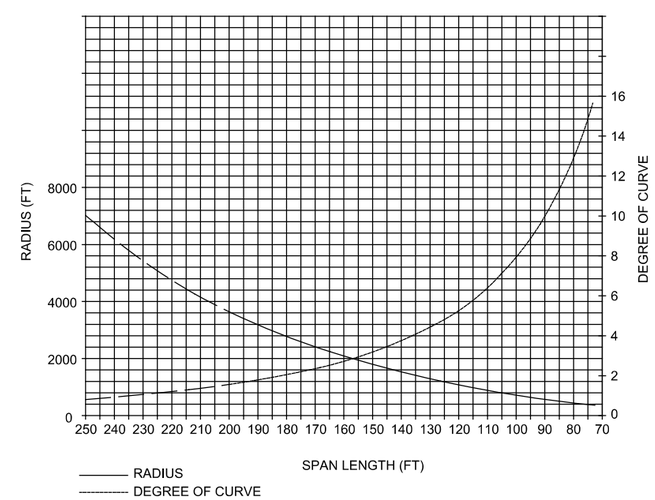

JKIELLMA

PLOT DATE: 7/19/2017 8:56:53 PM

NOT FOR CONSTRUCTION

SERIES SYSGN-9 OF SYSGN-12

HDR Engineering, Inc.
8550 W Bryn Mawr Ave., Suite 900
Chicago, IL 60631
www.hdrinc.com

Burns
BURNS ENGINEERING, INC. | 215 979-7700
TWO COMMERCE SQUARE, 2001 MARKET ST, SUITE 600
PHILADELPHIA, PA 19103

ISSUE	DATE	DESCRIPTION

NICTD
NORTHERN INDIANA COMMUTER TRANSPORTATION DISTRICT
33 East Highway 12
Chesterton, Indiana 46304

WEST LAKE CORRIDOR
DYER TO HAMMOND, INDIANA

DESIGNED: RSW
DRAWN: MJA
CHECKED: DP
DATE: 07/21/17

NICTD - WEST LAKE CORRIDOR - MP WL 61.38 TO WL 69.18
SINGLE TRACK

STRUCTURE SPACING CHART SYSTEM

FILENAME: SHT_WL_OCS_GN_023.dgn
SCALE: AS NOTED

SHEET 11 OF 248

60°F 80 MPH WIND

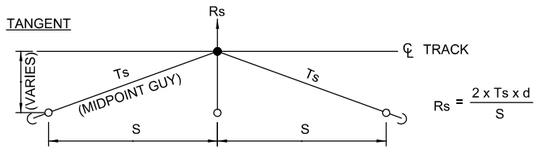

$$Rs = \frac{2 \times Ts \times d}{S}$$

RADIAL LOAD ON MIDPOINT POLE

LOADS (LBS.)	SPAN (FT)	60	75	90	105	120	135	150	165	180	195	210	225
GRAVITY LOAD	Gm	58	73	87	102	116	131	145	160	174	189	203	218
	Gc	61	77	92	107	122	138	153	168	184	199	214	230
	Gcat	119	149	179	209	239	268	298	328	358	388	418	447
WIND LOAD	Wm	50	63	75	88	101	113	126	138	151	163	176	188
	Wc	56	70	84	98	112	125	139	153	167	181	195	209
STAGGER LOAD (Rm)	8″ @0°F	222	178	148	127	111	99	89	81	74	68	63	59
	10″ @0°F	278	222	185	159	139	123	111	101	93	85	79	74
	12″ @0°F	333	267	222	190	167	148	133	121	111	103	95	89
STAGGER LOAD (Rc)	8″ @0°F	222	178	148	127	111	99	89	81	74	68	63	59
	10″ @0°F	278	222	185	159	139	123	111	101	93	85	79	74
	12″ @0°F	333	267	222	190	167	148	133	121	111	103	95	89

DESC.	RADIUS	LOAD (LBS.)											
RADIAL LOAD DUE TO CURVE (Rm)	7500	40	50	60	70	80	90	100	110	120	130	140	150
	5000	60	75	90	105	120	135	150	165	180	195	210	225
	4000	75	94	113	131	150	169	188	206	225	244	263	281
	3500	86	107	129	150	171	193	214	236	257	279	300	
	3000	100	125	150	175	200	225	250	275	300	325		
	2500	120	150	180	210	240	270	300	330	360			
	2000	150	188	225	263	300	338	375	413				
	1500	200	250	300	350	400	450	500					
	1000	300	375	450	525	600	675						
	900	333	417	500	583	667							
	800	375	469	563	656	750							
	700	429	536	643	750								
	600	500	625	750									
	500	600	750	900									
	400	750	938										
	300	1000	1250										
RADIAL LOAD DUE TO CURVE (Rc)	7500	40	50	60	70	80	90	100	110	120	130	140	150
	5000	60	75	90	105	120	135	150	165	180	195	210	225
	4000	75	94	113	131	150	169	188	206	225	244	263	281
	3500	86	107	129	150	171	193	214	236	257	279	300	
	3000	100	125	150	175	200	225	250	275	300	325		
	2500	120	150	180	210	240	270	300	330	360			
	2000	150	188	225	263	300	338	375	413				
	1500	200	250	300	350	400	450	500					
	1000	300	375	450	525	600	675						
	900	333	417	500	583	667							
	800	375	469	563	656	750							
	700	429	536	643	750								
	600	500	625	750									
	500	600	750	900									
	400	750	938										
	300	1000	1250										

Gc = 1.02 x S

Gm = 0.9683 x S

Wc = 16.4 x dc/12 x S

Wm = 16.4 x dm/12 x S

WHERE dc & dm = DIA. OF WIRES IN INCHES

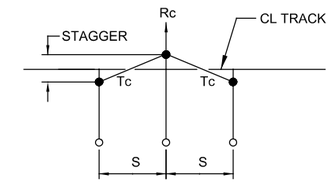

$$Rc = \frac{Tc \times 2 \times STAGGER}{S}$$

WHERE: STAGGER = FEET

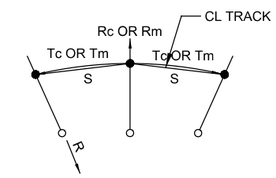

$$Rc = \frac{Tc}{R} \times S$$

OR

$$Rm = \frac{Tm}{R} \times S$$

CURVE PULL ON MESSENGER OR CONTACT WIRE

NOTATION OF GENERAL LOADING:

I. GRAVITY LOADS (G)

Gx = WT. OF CROSSARM ASSEMBLY (RESULTANT CAN BE APPLIED DIRECTLY TO THE MESSENGER)
Gm = WT. OF MESSENGER WIRE + HANGERS
Gc = WT. OF CONTACT WIRE (CAN BE APPLIED TO MESSENGER)
Gcat = WT. OF CATENARY
Gp = WT. OF POLE
Ga = AXIAL LOAD DUE TO GUY WIRE(S)
Gcw = WT. OF COUNTERWEIGHT (IF POLE IS USED AS COUNTERWEIGHT)
Gs = WT. OF MIDPOINT GUY/STRAND

II. RADIAL LOADS (R)

Rm = HORIZONTAL COMPONENT DUE TO TENSION IN MESSENGER WIRE
Rc = HORIZONTAL COMPONENT DUE TO TENSION IN CONTACT WIRE
Rs = HORIZONTAL COMPONENT DUE TO TENSION I MIDPOINT GUY

III. WIND LOADS (W)

Wm = WIND ON MESSENGER WIRES
Wc = WIND ON CONTACT WIRE
Ws = WIND ON SPAN WIRE
Wp = WIND ON POLE

IV. DIMENSION (FT)

L1, L 2, L3,.....Ln = VERTICAL DIMENSION (MOMENT ARM) REFER TO TOP OF BASE PLATE FOR STEEL POLES OR GROUND LINE FOR WOOD POLES
D1, D2, D3,....Dn = HORIZONTAL DIMENSION (MOMENT ARM) REFER TO CL OF POLE

V. TENSIONS (AT CATENARY)

Tm = 5000 LBS.
Tc = 5000 LBS.
Ts = 5000 LBS.

VI. OTHER DIMENSIONS/SYMBOLS

S = SPAN (FT)
d = DISTANCE C POLE TO CL TRACK (FT)
D = DEGREE OF CURVE
R = RADIUS OF CURVE $\approx \frac{5730\ (FT)}{D}$

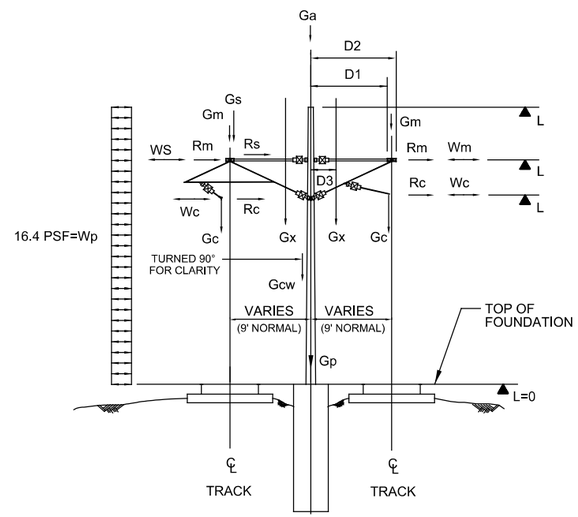

SINGLE CANTILEVER OR BACK TO BACK

N.T.S.

NOTES:

1. WIND LOAD (Wp) AND GRAVITY LOAD OF POLES (Gp) ARE NOT INCLUDED IN ABOVE TABLE.
2. WIND PRESSURE (80MPH):
   WIRES AND OTHER CYLINDRICAL SURFACES = 16.4 PSF
   H SHAPEDSURFACES = 19.68 PSF
   FLAT SURFACES = 22.96 PSF
3. WIND PRESSURE (40MPH)
   WIRES ETC. = 4.1 PSF
   H SHAPED SURFACES = 4.92 PSF
   FLAT SURFACES = 5.74 PSF
4. RADIAL LOADS ARE CALCULATED BASED ON 60°F
5. LOADS ON POLES SUPPORTING SPECIAL OVERHEAD EQUIPMENT SHALL BE CALCULATED AND DESIGNED INDIVIDUALLY.
6. LIVE LOAD DEFLECTION SHALL NOT EXCEED 4 1/2" AT CONTACT WIRE LEVEL. THIS DOES NOT INCLUDE DEFLECTION DUE TO OTHER PARTS OF THE SUPPORT SYSTEMS. SUCH AS FOUNDATION AND ANCHOR BOLTS.
7. ADDITIONAL WIND LOAD, RADIAL LOAD AND GRAVITY LOAD SHALL BE CALCULATED AND ADDED WHEN POLE IS USED TO SUPPORT OTHER FACILITIES.
8. LOADS SHOWN ON DIAGRAM WILL BE THOSE THAT PRODUCE MAXIMUM MOMENTS FROM EITHER 60°, 80 MPH WIND, BARE WIRES OR 0°, 1/2" ICED WIRES, 40 MPH WIND LOAD CASES.

NOT FOR CONSTRUCTION

SERIES SYSGN-10 OF SYSGN-12

JKIELLMA

PLOT DATE: 7/19/2017 8:57:07 PM

HDR Engineering, Inc.
8550 W Bryn Mawr Ave., Suite 900
Chicago, IL 60631
www.hdrinc.com

Burns
BURNS ENGINEERING, INC. | 215 979-7700
TWO COMMERCE SQUARE, 2001 MARKET ST, SUITE 600
PHILADELPHIA, PA 19103

ISSUE	DATE	DESCRIPTION

NICTD
NORTHERN INDIANA COMMUTER TRANSPORTATION DISTRICT
33 East Highway 12
Chesterton, Indiana 46304

WEST LAKE CORRIDOR
DYER TO HAMMOND, INDIANA

DESIGNED:	RSW
DRAWN:	MJA
CHECKED:	MP
DATE:	07/21/17

NICTD - WEST LAKE CORRIDOR - MP WL 61.38 TO WL 69.18
SINGLE TRACK

LOADING DIAGRAM (1 OF 2)
SYSTEM

FILENAME	SHT_WL_OCS_GN_024.dgn
SCALE	AS NOTED

SHEET 12 OF 248

0°F,1/2" ICE, 40 MPH WIND

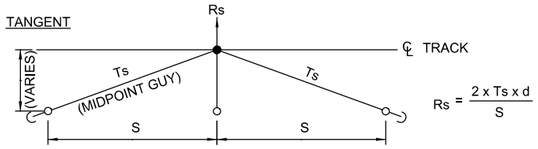

RADIAL LOAD ON MIDPOINT POLE

	SPAN (FT)	60	75	90	105	120	135	150	165	180	195	210	225
GRAVITY LOAD	Gm	100	125	149	174	199	224	249	274	299	324	349	374
	Gc	103	128	154	180	205	231	256	282	308	333	359	385
	Gcat	202	253	303	354	404	455	506	556	607	657	708	758
WIND LOAD	Wm	33	41	50	58	66	74	83	91	99	107	116	124
	Wc	34	43	52	60	69	77	86	95	103	112	121	129
STAGGER LOAD (Rm)	8″ @0°F	274	219	182	156	137	122	109	99	91	84	78	73
	10″ @0°F	222	178	148	127	111	99	89	81	74	68	63	59
	12″ @0°F	342	274	228	195	171	152	137	124	114	105	98	91
STAGGER LOAD (Rc)	8″ @0°F	278	222	185	159	139	123	111	101	93	85	79	74
	10″ @0°F	411	329	274	235	205	183	164	149	137	126	117	110
	12″ @0°F	333	267	222	190	167	148	133	121	111	103	95	89

LOADS (LBS.)

DESC.	RADIUS	LOAD (LBS.)											
RADIAL LOAD DUE TO CURVE (Rm)	7500	49	62	74	86	99	111	123	136	148	160	172	185
	5000	74	92	111	129	148	166	185	203	222	240	259	277
	4000	92	116	139	162	185	208	231	254	277	300	323	347
	3500	106	132	158	185	211	238	264	290	317	343	370	
	3000	123	154	185	216	246	277	308	339	370	400		
	2500	148	185	222	259	296	333	370	407	444			
	2000	185	231	277	323	370	416	462	508				
	1500	246	308	370	431	493	554	616					
	1000	370	462	554	647	739	832						
	900	411	513	616	719	821							
	800	462	578	693	809	924							
	700	528	660	792	924								
	600	616	770	924									
	500	739	924	1109									
	400	924	1155										
	300	1232	1540										
RADIAL LOAD DUE TO CURVE (Rc)	7500	40	50	60	70	80	90	100	110	120	130	140	150
	5000	60	75	90	105	120	135	150	165	180	195	210	225
	4000	75	94	113	131	150	169	188	206	225	244	263	281
	3500	86	107	129	150	171	193	214	236	257	279	300	
	3000	100	125	150	175	200	225	250	275	300	325		
	2500	120	150	180	210	240	270	300	330	360			
	2000	150	188	225	263	300	338	375	413				
	1500	200	250	300	350	400	450	500					
	1000	300	375	450	525	600	675						
	900	333	417	500	583	667							
	800	375	469	563	656	750							
	700	429	536	643	750								
	600	500	625	750									
	500	600	750	900									
	400	750	938										
	300	1000	1250										

Gc = 1.7097 x S

Gm = 1.6603 x S

Wc = 4.1 x dc/12 x S

Wm = 4.1 x dm/12 x S

WHERE dc & dm = DIA. OF WIRES WITH ICE IN INCHES

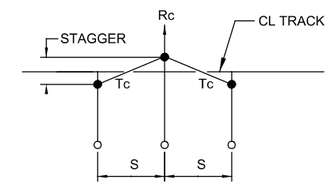

Rc = Tc x 2 x STAGGER / S

WHERE: STAGGER = FEET

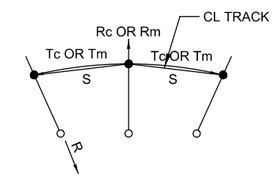

Rc = Tc / R x S

OR

Rm = Tm / R x S

CURVE PULL ON MESSENGER OR CONTACT WIRE

NOTATION OF GENERAL LOADING:

I. GRAVITY LOADS (G)

Gx = WT. OF CROSSARM ASSEMBLY (RESULTANT CAN BE APPLIED DIRECTLY TO THE MESSENGER)
Gm = WT. OF MESSENGER WIRE + HANGERS + ICE
Gc = WT. OF CONTACT WIRE (CAN BE APPLIED TO MESSENGER) + ICE
Gcat = WT. OF CATENARY WITH ICE
Gp = WT. OF POLE
Ga = AXIAL LOAD DUE TO GUY WIRE(S)
Gcw = WT. OF COUNTERWEIGHT (IF POLE IS USED AS COUNTERWEIGHT)
Gs = WT. OF MIDPOINT GUY/STRAND

II. RADIAL LOADS (R)

Rm = HORIZONTAL COMPONENT DUE TO TENSION IN MESSENGER WIRE
Rc = HORIZONTAL COMPONENT DUE TO TENSION IN CONTACT WIRE
Rs = HORIZONTAL COMPONENT DUE TO TENSION I MIDPOINT GUY

III. WIND LOADS (W)

Wm = WIND ON MESSENGER WIRES
Wc = WIND ON CONTACT WIRE
Ws = WIND ON SPAN WIRE
Wp = WIND ON POLE

IV. DIMENSION (FT)

L1, L 2, L3,.....Ln = VERTICAL DIMENSION (MOMENT ARM) REFER TO TOP OF BASE PLATE FOR STEEL POLES OR GROUND LINE FOR WOOD POLES
D1, D2, D3,....Dn = HORIZONTAL DIMENSION (MOMENT ARM) REFER TO CL OF POLE

V. TENSIONS (AT CATENARY)

Tm = 6160 LBS.
Tc = 5000 LBS.
Ts = 6160 LBS.

VI. OTHER DIMENSIONS/SYMBOLS

S = SPAN (FT)
d = DISTANCE CL POLE TO CL TRACK (FT)
D = DEGREE OF CURVE
R = RADIUS OF CURVE ≈ 5730 (FT) / D

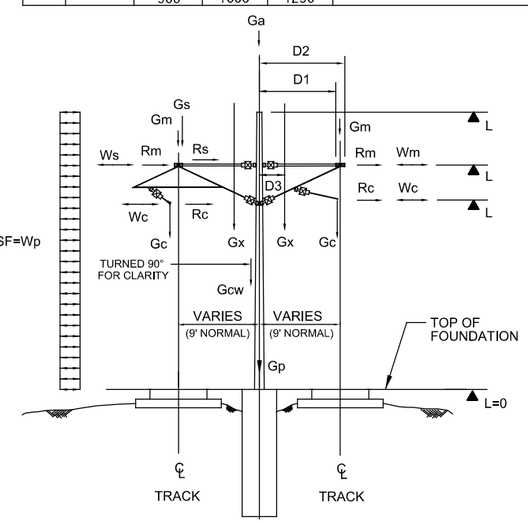

SINGLE CANTILEVER OR BACK TO BACK

N.T.S.

NOTES:

1. WIND LOAD (Wp) AND GRAVITY LOAD OF POLES (Gp) ARE NOT INCLUDED IN ABOVE TABLE.
2. WIND PRESSURE (80MPH):
   WIRES AND OTHER CYLINDRICAL SURFACES = 16.4 PSF
   H SHAPEDSURFACES = 19.68 PSF
   FLAT SURFACES = 22.96 PSF
3. WIND PRESSURE (40MPH)
   WIRES ETC. = 4.1 PSF
   H SHAPED SURFACES = 4.92 PSF
   FLAT SURFACES = 5.74 PSF
4. RADIAL LOADS ARE CALCULATED BASED ON 0°F TENSIONS.
5. LOADS ON POLES SUPPORTING SPECIAL OVERHEAD EQUIPMENT SHALL BE CALCULATED AND DESIGNED INDIVIDUALLY.
6. LIVE LOAD DEFLECTION SHALL NOT EXCEED 4 1/2" AT CONTACT WIRE LEVEL. THIS DOES NOT INCLUDE DEFLECTION DUE TO OTHER PARTS OF THE SUPPORT SYSTEMS. SUCH AS FOUNDATION AND ANCHOR BOLTS.
7. ADDITIONAL WIND LOAD, RADIAL LOAD AND GRAVITY LOAD SHALL BE CALCULATED AND ADDED WHEN POLE IS USED TO SUPPORT OTHER FACILITIES.
8. LOADS SHOWN ON DIAGRAM WILL BE THOSE THAT PRODUCE MAXIMUM MOMENTS FROM EITHER 60°, 80 MPH WIND, BARE WIRES OR 0°, 1/2" ICED WIRES, 40 MPH WIND LOAD CASES.

NOT FOR CONSTRUCTION

SERIES SYSGN-11 OF SYSGN-12

JKJELLMA

7/19/2017 8:57:18 PM

PLOT DATE:

HDR Engineering, Inc.
8550 W Bryn Mawr Ave., Suite 900
Chicago, IL 60631
www.hdrinc.com

Burns
BURNSENGINEERING, INC. | 215 979-7700
TWO COMMERCE SQUARE, 2001 MARKET ST, SUITE 600
PHILADELPHIA, PA 19103

ISSUE	DATE	DESCRIPTION

NICTD
NORTHERN INDIANA COMMUTER TRANSPORTATION DISTRICT
33 East Highway 12
Chesterton, Indiana 46304

WEST LAKE CORRIDOR
DYER TO HAMMOND, INDIANA

DESIGNED:	RSW
DRAWN:	MJA
CHECKED:	MP
DATE:	07/21/17

NICTD - WEST LAKE CORRIDOR - MP WL 61.38 TO WL 69.18
SINGLE TRACK

LOADING DIAGRAM (2 OF 2)
SYSTEM

FILENAME	SHT_WL_OCS_GN_025.dgn	SHEET 13 OF 248
SCALE	AS NOTED	

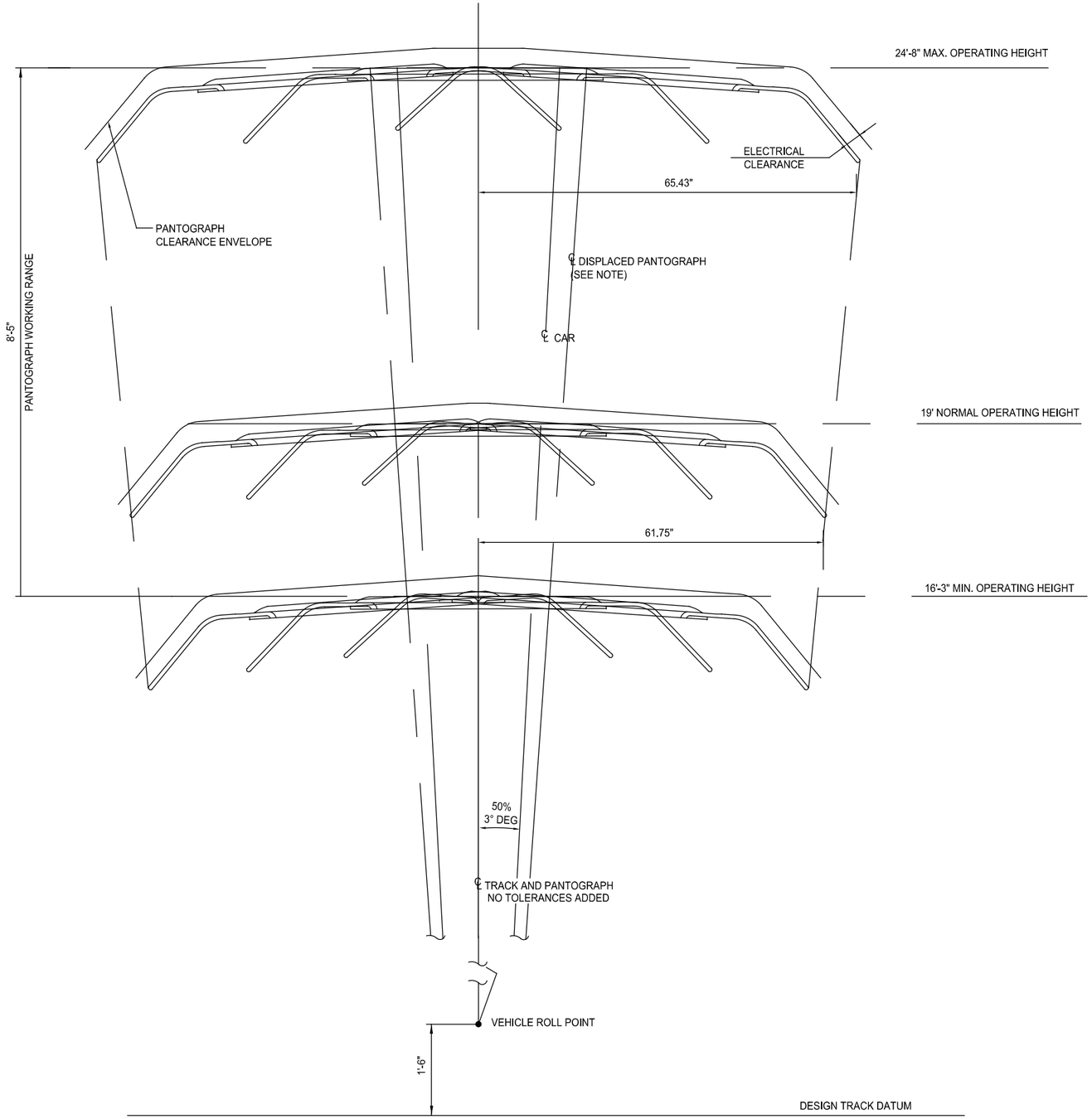

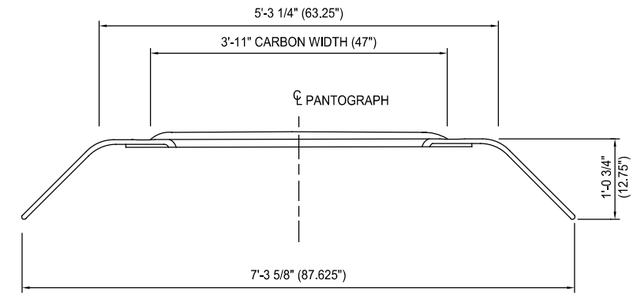

NOTE:

DYNAMIC OUTLINE UNDER EXTREME CONDITIONS OF DISPLACEMENT BASED ON DATA FURNISHED BY NICTD. (PANT. BY NIPPON SHARYO DWG. NO VO135B13764.)

NICTD (NIPPON-SHARYO) PANTOGRAPH PARAMETERS

PARAMETERS USED TO ESTABLISH DISPLACEMENT		EFFECT AT		
		16'-3" IN.	19'-0" IN.	24'-8" IN.
TRACK (CLASS 4)	1 1/2"			
LATERAL SHIFT	1"	1.5	1.5	1.5
CROSS-LEVEL	1"	6.04	7.06	9.17
GAGE		0.5	0.5	0.5
TOTAL DISPLACEMENT		8.04	9.06	11.17
CAR				
LATERAL		2	2	2
ROTATIONAL	50% OF 3 DEG. at 1'-6" T/R	4.63	5.5	7.27
TOTAL DISPLACEMENT		6.63	7.7	9.27
PANTOGRAPH SWAY (independent of car)		1.18"	1.18"	1.18"
TOTAL HORIZONTAL DISPLACEMENT		15.85	17.94	21.62
1/2 PANTOGRAPH WIDTH		43.81	43.81	43.81
1/2 PANTOGRAPH WIDTH EXTREME CONDITIONS		59.66	61.75	65.43

NOT FOR CONSTRUCTION

SERIES SYSGN-12 OF SYSGN-12

JKIELLMA

PLOT DATE: 7/19/2017 8:57:27 PM

HDR Engineering, Inc.
8550 W Bryn Mawr Ave., Suite 900
Chicago, IL 60631
www.hdrinc.com

Burns
BURNS ENGINEERING, INC. | 215 979-7700
TWO COMMERCE SQUARE, 2001 MARKET ST, SUITE 600
PHILADELPHIA, PA 19103

ISSUE	DATE	DESCRIPTION

NICTD
NORTHERN INDIANA COMMUTER TRANSPORTATION DISTRICT
33 East Highway 12
Chesterton, Indiana 46304

WEST LAKE CORRIDOR
DYER TO HAMMOND, INDIANA

DESIGNED: RSW
DRAWN: MJA
CHECKED: MP
DATE: 07/21/17

NICTD - WEST LAKE CORRIDOR - MP WL 61.38 TO WL 69.18
SINGLE TRACK

PANTOGRAPH ENVELOPE SYSTEM

FILENAME SHT_WL_OCS_GN_026.dgn
SCALE AS NOTED
SHEET 14 OF 248

SIGNAL POWER ASSEMBLY										
MISC. ASSEMBLIES AND FEEDERS 2		(2)461-2, 462-1			460-1	460-1	460-1	460-2	460-1, 462-2	460-1
MISC. ASSEMBLIES AND FEEDERS 1	441-1							441-1	503-1	503-1
JUMPERS					428-2					
HANGERS		213-129	210-174	210-175	210-174	210-174		210-210	210-158	210-187
SUPPORT REGISTRATION REFERENCE		401-1		401-1	401-1	401-1	401-1		416-6, 417-1, 417-2-42"	416-6, 417-1, 417-2-42"
DOWN GUY ASSEMBLY	449-1	(2)449-1						449-1		
IN-SPAN ASSEMBLIES										
TERMINATION HEIGHT	24'-0							24'-0"		
FOUNDATION REFERENCE	521-15							521-15		
POLE REFERENCE	500-35	525-40-8		525-40-8	525-40-8	525-40-8	525-40-8	500-35	525-40-8	525-40-8
STAGGER		▲ 6"		▼ 6"	▲ 6"	▼ 6"	▲ 6"		0"	▼ 6"
MESSENGER WIRE HEIGHT		24'-0"		24'-0"	24'-0"	24'-0"	24'-0"		24'-0"	24'-0"
TROLLEY WIRE HEIGHT		21'-0"		21'-0"	21'-0"	21'-0"	21'-0"		21'-0"	21'-0"
FACE OF POLE TO CENTERLINE TRACK	4'-6"	9'-0"		9'-0"	9'-0"	9'-0"	9'-0"	9'-0"	9'-0"	9'-0"
STATIONING	3239+71	3241+00		3242+74	3244+49	3246+23	3247+62	3248+62	3249+72	3251+30
STRUCTURE NO.	61-01	61-02		61-03	61-04	61-05	61-06	61-07	61-08	61-10

TO MUNSTER/DYER

TO HAMMOND GATEWAY

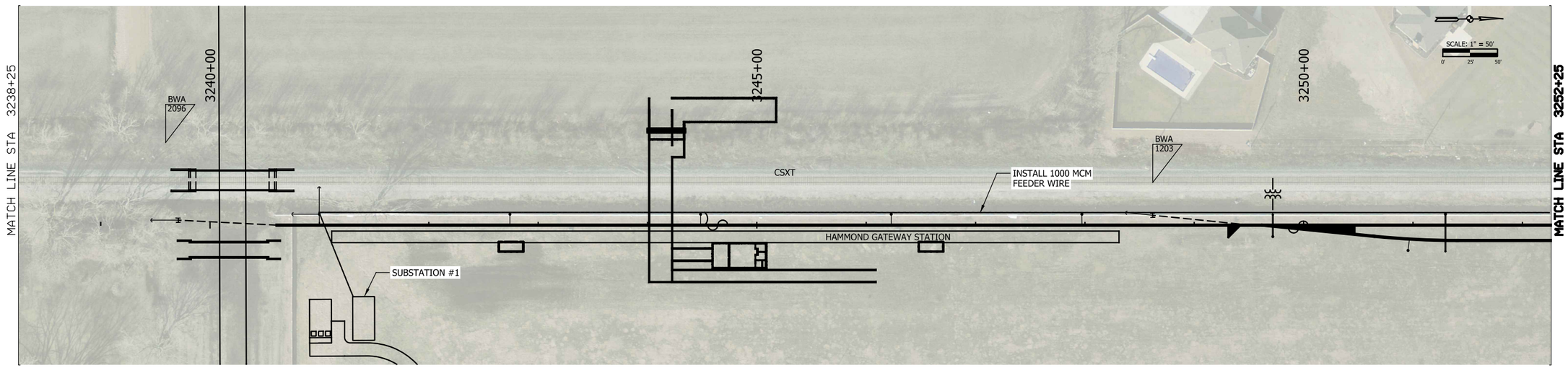

STRUCTURE NO.		61-08	61-09	61-10
STATIONING		3249+72	3250+95	3251+30
FACE OF POLE TO CENTERLINE TRACK		9'-0"	9'-0"	9'-0"
TROLLEY WIRE HEIGHT		21'-1"		21'-0"
MESSENGER WIRE HEIGHT		24'-0"		24'-0"
STAGGER		0"	▼ 3"	▼ 6"
POLE REFERENCE		525-40-8	525-40-8	525-40-8
FOUNDATION REFERENCE				
TERMINATION HEIGHT				
IN-SPAN ASSEMBLIES				
DOWN GUY ASSEMBLY				
SUPPORT REGISTRATION REFERENCE		416-6, 417-2-42"	418-1	416-6, 417-2-42"
HANGERS	213-110		210-158	
JUMPERS		428-1		
MISC. ASSEMBLIES AND FEEDERS 1				
MISC. ASSEMBLIES AND FEEDERS 2		427-1, 427-2		
SIGNAL POWER ASSEMBLY				

OCS PLAN SHEET

NOTES

1. INSTALL NICTD PARALLEL FEEDER PER PLANS.
2. INSTALL NICTD FIBER OPTIC LINES PER PLANS.

NOT FOR CONSTRUCTION

SERIES SYSPL-1 OF SYSPL-38

JKIELLMA

PLOT DATE: 7/19/2017 8:58:48 PM

HDR Engineering, Inc.
8550 W Bryn Mawr Ave., Suite 900
Chicago, IL 60631
www.hdrinc.com

Burns
BURNSENGINEERING, INC. | 215 979-7700
TWO COMMERCE SQUARE, 2001 MARKET ST, SUITE 600
PHILADELPHIA, PA 19103

ISSUE	DATE	DESCRIPTION

NICTD
NORTHERN INDIANA COMMUTER TRANSPORTATION DISTRICT
33 East Highway 12
Chesterton, Indiana 46304

WEST LAKE CORRIDOR
DYER TO HAMMOND, INDIANA

DESIGNED: RSW
DRAWN: VJC
CHECKED: MP
DATE: 07/21/17

NICTD - WEST LAKE CORRIDOR - MP WL 61.38 TO WL 69.18
SINGLE TRACK

PLAN STA 3238+25 TO 3252+25 SYSTEM

FILENAME SHT_WL_OCS_PL_101.dgn
SCALE AS NOTED
SHEET 15 OF 248

SIGNAL POWER ASSEMBLY							
MISC. ASSEMBLIES AND FEEDERS 2	460-1	460-1	460-1	460-1	460-1	460-1	460-1
MISC. ASSEMBLIES AND FEEDERS 1				462-2	410-1		
JUMPERS				428-2			
HANGERS	210-188	210-187	210-188	210-187	210-188	210-186	210-188
SUPPORT REGISTRATION REFERENCE	401-1	400-1	401-1	400-1	416-1, 417-1, 417-2-42"	400-1	401-1
DOWN GUY ASSEMBLY				449-1		449-1	
IN-SPAN ASSEMBLIES							
TERMINATION HEIGHT							
FOUNDATION REFERENCE							
POLE REFERENCE	525-40-8	525-40-8	525-40-8	525-40-8	525-40-8	525-40-8	525-40-8
STAGGER	▲ 6"	▼ 6"	▲ 6"	▼ 6"	▲ 6"	▼ 6"	▲ 6"
MESSENGER WIRE HEIGHT	24'-0"	24'-0"	24'-0"	24'-0"	24'-0"	24'-0"	24'-0"
TROLLEY WIRE HEIGHT	21'-0"	21'-0"	21'-0"	21'-0"	21'-0"	21'-0"	21'-0"
FACE OF POLE TO CENTERLINE TRACK	9'-0"	9'-0"	9'-0"	9'-0"	9'-0"	9'-0"	9'-0"
STATIONING	3253+28	3255+16	3257+03	3258+91	3260+78	3262+66	3264+52
STRUCTURE NO.	61-11	61-12	61-13	61-14	61-15	61-16	61-17

TO MUNSTER/DYER

TO HAMMOND GATEWAY

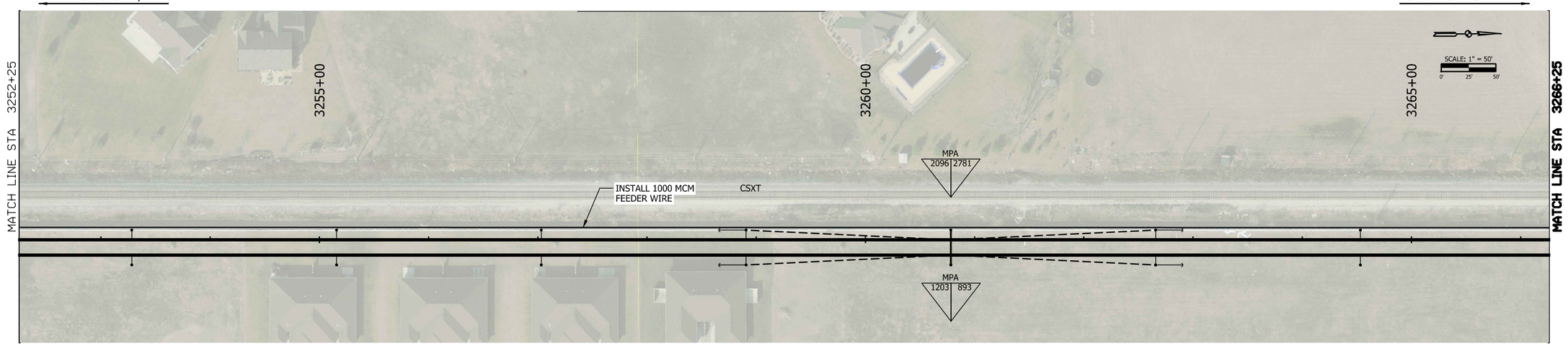

STRUCTURE NO.	61-11	61-12	61-13	61-14	61-15	61-16	61-17
STATIONING	3253+28	3255+16	3257+03	3258+91	3260+78	3262+66	3264+52
FACE OF POLE TO CENTERLINE TRACK	9'-0"	9'-0"	9'-0"	9'-0"	9'-0"	9'-0"	9'-0"
TROLLEY WIRE HEIGHT	21'-0"	21'-0"	21'-0"	21'-0"	21'-0"	21'-0"	21'-0"
MESSENGER WIRE HEIGHT	24'-0"	24'-0"	24'-0"	24'-0"	24'-0"	24'-0"	24'-0"
STAGGER	▲ 6"	▼ 6"	▲ 6"	▼ 6"	▲ 6"	▼ 6"	▲ 6"
POLE REFERENCE	525-40-8	525-40-8	525-40-8	525-40-8	525-40-8	525-40-8	525-40-8
FOUNDATION REFERENCE							
TERMINATION HEIGHT							
IN-SPAN ASSEMBLIES							
DOWN GUY ASSEMBLY				449-1		449-1	
SUPPORT REGISTRATION REFERENCE	400-1	401-1	400-1	401-1	416-1, 417-2-42	401-1	400-1
HANGERS	210-188	210-187	210-188	210-187	210-188	210-186	210-188
JUMPERS							
MISC. ASSEMBLIES AND FEEDERS 1				428-2	410-1		
MISC. ASSEMBLIES AND FEEDERS 2					503-1		
SIGNAL POWER ASSEMBLY							

OCS PLAN SHEET

NOTES

1. INSTALL NICTD PARALLEL FEEDER PER PLANS.
2. INSTALL NICTD FIBER OPTIC LINES PER PLANS.

NOT FOR CONSTRUCTION

SERIES SYSPL-2 OF SYSPL-38

JKIELMA

PLOT DATE: 7/19/2017 8:59:18 PM

HDR Engineering, Inc.
8550 W Bryn Mawr Ave., Suite 900
Chicago, IL 60631
www.hdrinc.com

Burns
BURNS ENGINEERING, INC. | 215 979-7700
TWO COMMERCE SQUARE, 2001 MARKET ST, SUITE 600
PHILADELPHIA, PA 19103

ISSUE	DATE	DESCRIPTION

NICTD
NORTHERN INDIANA COMMUTER TRANSPORTATION DISTRICT
33 East Highway 12
Chesterton, Indiana 46304

WEST LAKE CORRIDOR
DYER TO HAMMOND, INDIANA

DESIGNED: RSW
DRAWN: VJC
CHECKED: MP
DATE: 07/21/17

NICTD - WEST LAKE CORRIDOR - MP WL 61.38 TO WL 69.18
SINGLE TRACK

PLAN STA 3252+25 TO 3266+25 SYSTEM

FILENAME SHT_WL_OCS_PL_102.dgn
SCALE AS NOTED
SHEET 16 OF 248

SIGNAL POWER ASSEMBLY									
MISC. ASSEMBLIES AND FEEDERS 2	460-1	460-1	460-2	460-1	460-1	460-1	461-1	460-1	460-1
MISC. ASSEMBLIES AND FEEDERS 1	503-1	503-1	441-1				462-2		
JUMPERS							428-2		
HANGERS	210-158		210-172	210-172	210-172	210-172	210-172	210-200	210-200
SUPPORT REGISTRATION REFERENCE	416-6, 417-1, 417-2-42"	416-6, 417-1, 417-2-42"		401-1	400-1	401-1	400-1	401-1	400-1
DOWN GUY ASSEMBLY			449-1				(2) 499-1		
IN-SPAN ASSEMBLIES									
TERMINATION HEIGHT			24'-0"						
FOUNDATION REFERENCE			521-15						
POLE REFERENCE	525-40-8	525-40-8	500-35	525-40-8	525-40-8	525-40-8	525-40-8	525-40-8	525-40-8
STAGGER	▼ 6"	0"		▲ 6"	▼ 6"	▲ 6"	▼ 6"	▲ 6"	▼ 6"
MESSENGER WIRE HEIGHT	24'-0"	24'-0"		24'-0"	24'-0"	24'-0"	24'-0"	24'-0"	24'-6
TROLLEY WIRE HEIGHT	21'-0"	21'-0"		21'-0"	21'-0"	21'-0"	21'-0"	21'-0"	21'-0"
FACE OF POLE TO CENTERLINE TRACK	9'-0"	9'-0"	9'-0"	9'-0"	9'-0"	9'-0"	9'-0"	9'-0"	9'-0"
STATIONING	3266+40	3267+98	3269+08	3269+70	3271+42	3273+14	3274+86	3276+58	3278+58
STRUCTURE NO.	61-18	61-20	61-21	61-22	61-23	61-24	62-01	62-02	63-03

TO MUNSTER/DYER

TO HAMMOND GATEWAY

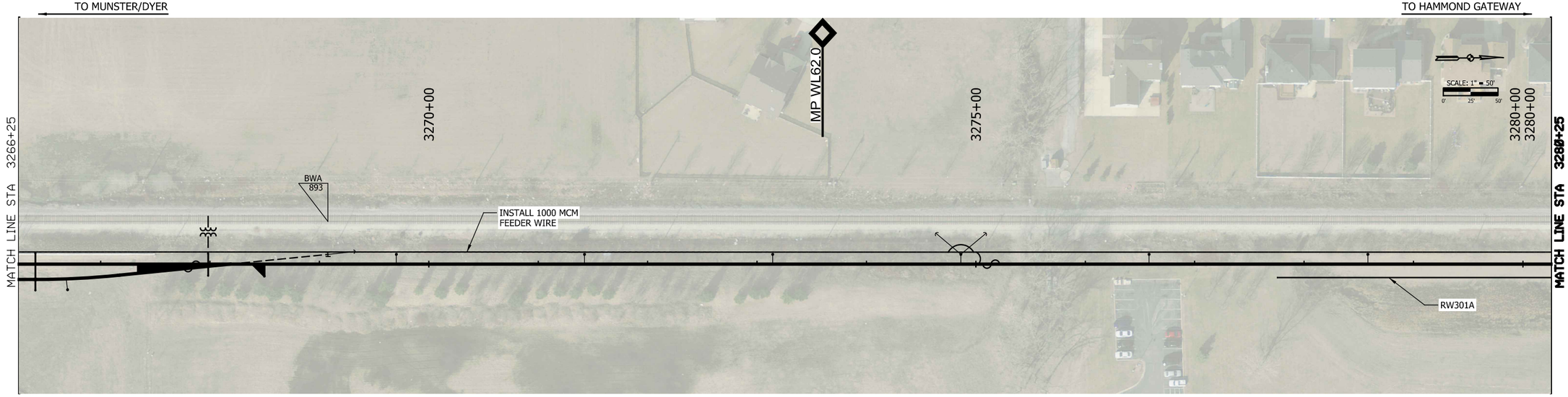

STRUCTURE NO.	61-18	61-19	61-20
STATIONING	3266+40	3266+69	3267+98
FACE OF POLE TO CENTERLINE TRACK	9'-0"	9'-0"	9'-0"
TROLLEY WIRE HEIGHT	21'-0"		21'-1"
MESSENGER WIRE HEIGHT	24'-0"		24'-0"
STAGGER	▼ 6"	▼ 3"	0"
POLE REFERENCE	525-40-8	525-40-8	525-40-8
FOUNDATION REFERENCE			
TERMINATION HEIGHT			
IN-SPAN ASSEMBLIES			
DOWN GUY ASSEMBLY			
SUPPORT REGISTRATION REFERENCE	416-6, 417-2-42"	418-1	416-6, 417-2-42"
HANGERS		210-158	213-110
JUMPERS			
MISC. ASSEMBLIES AND FEEDERS 1			428-1
MISC. ASSEMBLIES AND FEEDERS 2			427-1, 427-2
SIGNAL POWER ASSEMBLY			

OCS PLAN SHEET

NOTES

1. INSTALL NICTD PARALLEL FEEDER PER PLANS.
2. INSTALL NICTD FIBER OPTIC LINES PER PLANS.

NOT FOR CONSTRUCTION

SERIES SYSPL-3 OF SYSPL-38

JKIELLMA

PLOT DATE: 7/19/2017 8:59:50 PM

HDR Engineering, Inc.
8550 W Bryn Mawr Ave., Suite 900
Chicago, IL 60631
www.hdrinc.com

Burns
BURNS ENGINEERING, INC. | 215 979-7700
TWO COMMERCE SQUARE, 2001 MARKET ST, SUITE 600
PHILADELPHIA, PA 19103

ISSUE	DATE	DESCRIPTION

NICTD
NORTHERN INDIANA COMMUTER TRANSPORTATION DISTRICT
33 East Highway 12
Chesterton, Indiana 46304

WEST LAKE CORRIDOR
DYER TO HAMMOND, INDIANA

DESIGNED: RSW
DRAWN: VJC
CHECKED: MP
DATE: 07/21/17

NICTD - WEST LAKE CORRIDOR - MP WL 61.38 TO WL 69.18
SINGLE TRACK

PLAN STA 3266+25 TO 3280+25 SYSTEM

FILENAME SHT_WL_OCS_PL_103.dgn
SCALE AS NOTED
SHEET 17 OF 248

SIGNAL POWER ASSEMBLY								
MISC. ASSEMBLIES AND FEEDERS 2	460-1	460-1	460-1	460-1	460-1	460-1	460-1	461-2, 428-2
MISC. ASSEMBLIES AND FEEDERS 1	462-2	441-1				462-2	441-1	508-X
JUMPERS	428-2					428-1		
HANGERS	210-200	210-200, 213-210		(2) 214-200		210-190, 213-200	210-200	
SUPPORT REGISTRATION REFERENCE	400-1	401-1	400-1	406-1	406-1	401-1	400-1	416-6, 417-1, 417-2-42"
DOWN GUY ASSEMBLY		449-1					449-1	449-1
IN-SPAN ASSEMBLIES								
TERMINATION HEIGHT		26'-0"					26'-0"	
FOUNDATION REFERENCE		521-15					521-15	523-xx
POLE REFERENCE	525-40-8	500-35	525-40-8	525-40-8	525-40-8	525-40-8	500-35	525-40-8
STAGGER	▼ 6"	▲ 6"	▼ 6"	▲ 6"	▼ 6"	▲ 6"	▼ 6"	▲ 6"
MESSENGER WIRE HEIGHT	24'-6	24'-6	24'-6"	25'-6"	24'-6"	25'-6"	24'-6"	24'-6"
TROLLEY WIRE HEIGHT	21'-0"	21'-0"	21'-0"	21'-11"	21'-11"	21'-0"	21'-0"	21'-0"
FACE OF POLE TO CENTERLINE TRACK	9'-0"	9'-0"	9'-0"	9'-0"	9'-0"	9'-0"	9'-0"	9'-0"
STATIONING	3280+58	3282+58	3284+58	3284+68	3286+58	3286+68	3288+58	3290+58
STRUCTURE NO.	62-04	62-05	62-06	62-07	62-08	62-09	62-10	62-11

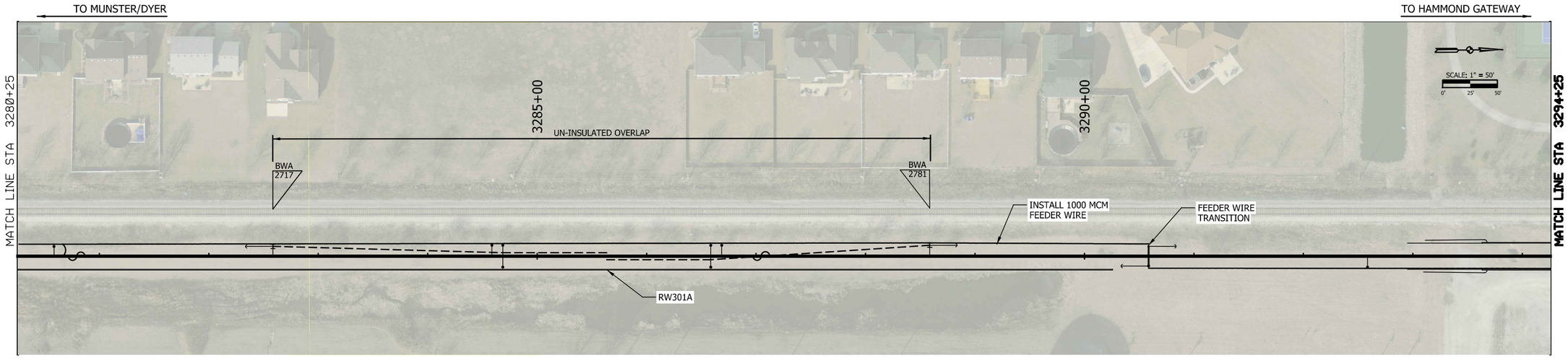

STRUCTURE NO.	62-07	62-08	62-11	62-12		
STATIONING	3284+68	3286+58	3290+58	3292+58		
FACE OF POLE TO CENTERLINE TRACK	9'-0"	9'-0"	9'-0"	9'-0"		
TROLLEY WIRE HEIGHT				21'-0"		
MESSENGER WIRE HEIGHT				24'-6"		
STAGGER				▼ 6"		
POLE REFERENCE	525-40-8	525-40-8	525-40-8	525-40-8		
FOUNDATION REFERENCE			523-xx			
TERMINATION HEIGHT						
IN-SPAN ASSEMBLIES						
DOWN GUY ASSEMBLY	449-2	449-2	449-1			
SUPPORT REGISTRATION REFERENCE				400-1		
HANGERS				210-200	210-200	
JUMPERS						
MISC. ASSEMBLIES AND FEEDERS 1			508-X, PORTAL			
MISC. ASSEMBLIES AND FEEDERS 2			461-2, 429-1, 429-6	460-1		
SIGNAL POWER ASSEMBLY						

OCS PLAN SHEET

NOTES

1. INSTALL NICTD PARALLEL FEEDER PER PLANS.
2. INSTALL NICTD FIBER OPTIC LINES PER PLANS.

JKJELLMA

PLOT DATE: 7/19/2017 9:00:57 PM

NOT FOR CONSTRUCTION

SERIES SYSPL-4 OF SYSPL-38

HDR Engineering, Inc.
8550 W Bryn Mawr Ave., Suite 900
Chicago, IL 60631
www.hdrinc.com

Burns
BURNS ENGINEERING, INC. | 215 979-7700
TWO COMMERCE SQUARE, 2001 MARKET ST, SUITE 600
PHILADELPHIA, PA 19103

ISSUE	DATE	DESCRIPTION

NICTD
NORTHERN INDIANA COMMUTER TRANSPORTATION DISTRICT
33 East Highway 12
Chesterton, Indiana 46304

WEST LAKE CORRIDOR
DYER TO HAMMOND, INDIANA

DESIGNED: RSW
DRAWN: VJC
CHECKED: MP
DATE: 07/21/17

NICTD - WEST LAKE CORRIDOR - MP WL 61.38 TO WL 69.18
SINGLE TRACK

PLAN STA 3280+25 TO 3294+25 SYSTEM

FILENAME SHT_WL_OCS_PL_104.dgn
SCALE AS NOTED
SHEET 18 OF 248

SIGNAL POWER ASSEMBLY	
MISC. ASSEMBLIES AND FEEDERS 2	
MISC. ASSEMBLIES AND FEEDERS 1	
JUMPERS	
HANGERS	
SUPPORT REGISTRATION REFERENCE	
DOWN GUY ASSEMBLY	
IN-SPAN ASSEMBLIES	
TERMINATION HEIGHT	
FOUNDATION REFERENCE	
POLE REFERENCE	
STAGGER	
MESSENGER WIRE HEIGHT	
TROLLEY WIRE HEIGHT	
FACE OF POLE TO CENTERLINE TRACK	
STATIONING	
STRUCTURE NO.	

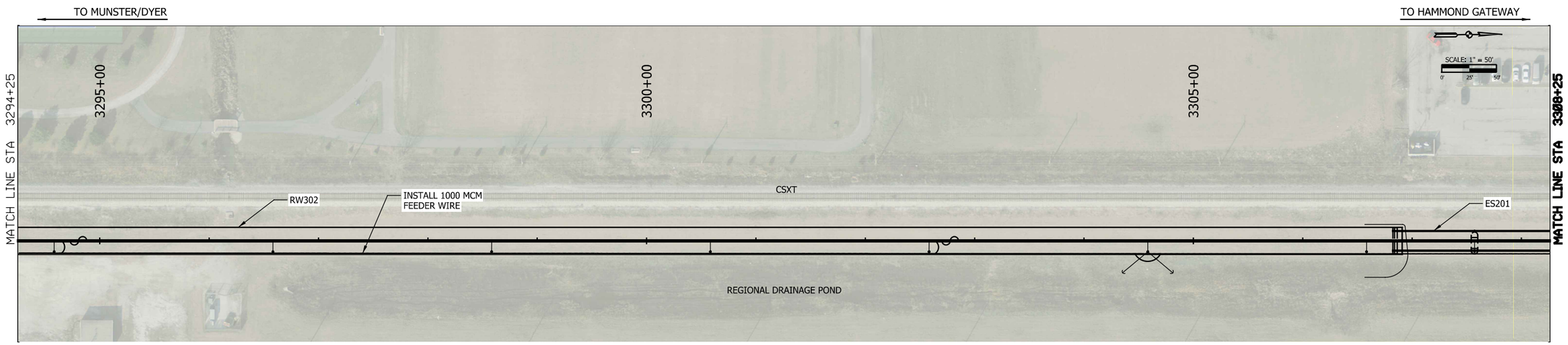

STRUCTURE NO.	62-13	62-14	62-15	62-16	62-17	62-18	62-19	62-20
STATIONING	3294+58	3296+58	3298+58	3300+58	3302+58	3304+58	3306+58	3307+57
FACE OF POLE TO CENTERLINE TRACK	9'-0"	9'-0"	9'-0"	9'-0"	9'-0"	9'-0"	9'-0"	X'-X"
TROLLEY WIRE HEIGHT	21'-0"	21'-0"	21'-0"	21'-0"	21'-0"	21'-0"	21'-0"	21'-0"
MESSENGER WIRE HEIGHT	24'-6"	24'-6"	24'-6"	24'-6"	24'-6"	24'-6"	24'-6"	24'-6"
STAGGER	▲ 6"	▼ 6"	▲ 6"	▼ 6"	▲ 6"	▼ 6"	▲ 6"	▼6"
POLE REFERENCE	501-2-30	501-2-30	501-2-30	501-2-30	501-2-30	501-2-30	501-2-30	501-2-30
FOUNDATION REFERENCE	523-xx	523-xx	523-xx	523-xx	523-xx	523-DGA 523-xx 523-DGA	523-xx	522-x
TERMINATION HEIGHT								
IN-SPAN ASSEMBLIES								
DOWN GUY ASSEMBLY						(2) 449-1		
SUPPORT REGISTRATION REFERENCE	401-1	400-1	401-1	400-1	401-1	400-1	401-1	401-1
HANGERS	210-200	210-200	210-200	210-200	210-200	210-200	210-99	210-72
JUMPERS	428-2				428-2			
MISC. ASSEMBLIES AND FEEDERS 1	462-2				461-1			
MISC. ASSEMBLIES AND FEEDERS 2	460-2	460-2	460-2	460-2	460-2	461-1A	460-1	460-1
SIGNAL POWER ASSEMBLY								

OCS PLAN SHEET

NOTES

1. INSTALL NICTD PARALLEL FEEDER PER PLANS.
2. INSTALL NICTD FIBER OPTIC LINES PER PLANS.
3. ALL STATION LOCATIONS FOR CATENARY POLES AND ASSOCIATED DEVICES LOCATED ON A PIER OR MOUNTED SUPERSTRUCTURE ARE APPROXIMATE. SEE THE STRUCTURAL PLANS FOR EXACT LOCATION AND LAYOUT.

NOT FOR CONSTRUCTION

SERIES SYSPL-5 OF SYSPL-38

JKELLMA

PLOT DATE: 7/19/2017 9:01:32 PM

HDR Engineering, Inc.
8550 W Bryn Mawr Ave., Suite 900
Chicago, IL 60631
www.hdrinc.com

Burns
BURNSENGINEERING, INC. | 215 979-7700
TWO COMMERCE SQUARE, 2001 MARKET ST, SUITE 600
PHILADELPHIA, PA 19103

ISSUE	DATE	DESCRIPTION

NICTD
NORTHERN INDIANA COMMUTER TRANSPORTATION DISTRICT
33 East Highway 12
Chesterton, Indiana 46304

WEST LAKE CORRIDOR
DYER TO HAMMOND, INDIANA

DESIGNED: RSW
DRAWN: VJC
CHECKED: MP
DATE: 07/21/17

NICTD - WEST LAKE CORRIDOR - MP WL 61.38 TO WL 69.18
SINGLE TRACK

PLAN STA 3294+25 TO 3308+25
SYSTEM

FILENAME SHT_WL_OCS_PL_105.dgn
SCALE AS NOTED
SHEET 19 OF 248

SIGNAL POWER ASSEMBLY	
MISC. ASSEMBLIES AND FEEDERS 2	
MISC. ASSEMBLIES AND FEEDERS 1	
JUMPERS	
HANGERS	
SUPPORT REGISTRATION REFERENCE	
DOWN GUY ASSEMBLY	
IN-SPAN ASSEMBLIES	
TERMINATION HEIGHT	
FOUNDATION REFERENCE	
POLE REFERENCE	
STAGGER	
MESSENGER WIRE HEIGHT	
TROLLEY WIRE HEIGHT	
FACE OF POLE TO CENTERLINE TRACK	
STATIONING	
STRUCTURE NO.	

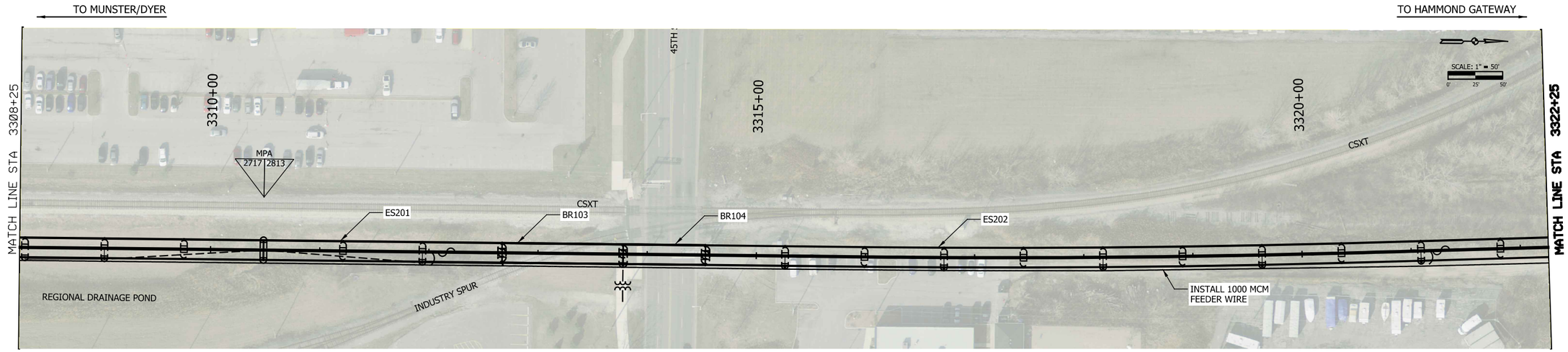

STRUCTURE NO.	62-21	62-22	62-23	62-24	62-25	62-26	62-27	62-28	62-29
STATIONING	3308+30 3309+03	3310+48	3311+94 3312+67	3313+78	3315+26	3316+72	3318+17	3319+63	3321+09
FACE OF POLE TO CENTERLINE TRACK	X'-X"	X'-X"	X'-X"	X'-X"	X'-X"	X'-X"	X'-X"	X'-X"	X'-X"
TROLLEY WIRE HEIGHT	21'-0"	21'-0"	21'-0"	21'-0"	21'-0"	21'-0"	21'-0"	21'-0"	21'-0"
MESSENGER WIRE HEIGHT	24'-6"	24'-6"	24'-6"	24'-6"	24'-6"	24'-6"	24'-6"	24'-6"	24'-6"
STAGGER	▲ 6"	▼ 6"	▲ 6"	▼ 6"	▲ 6"	▼ 6"	▲ 6"	▼ 6"	▲ 6"
POLE REFERENCE	501-2-30	501-2-30	501-2-30	501-2-30	501-2-30	501-2-30	501-2-30	501-2-30	501-2-30
FOUNDATION REFERENCE	522-DGA 522-x	522-x	522-x 522-DGA	522-x	522-x	522-x	522-x	522-x	522-x
TERMINATION HEIGHT									
IN-SPAN ASSEMBLIES									
DOWN GUY ASSEMBLY	449-1		449-1						
SUPPORT REGISTRATION REFERENCE	400-1	416-1, 417-1, 417-2-42"	400-1	401-1	400-1	401-1	400-1	401-1	400-1
HANGERS	210-145	210-146	210-184	210-148	210-146	210-146	210-146	210-146	210-145
JUMPERS			428-2						428-2
MISC. ASSEMBLIES AND FEEDERS 1		410-1	462-2						462-2
MISC. ASSEMBLIES AND FEEDERS 2	460-2	460-2	460-2	460-2	460-2	460-2	460-2	460-2	460-2
SIGNAL POWER ASSEMBLY									

OCS PLAN SHEET

NOTES

1. INSTALL NICTD PARALLEL FEEDER PER PLANS.
2. INSTALL NICTD FIBER OPTIC LINES PER PLANS.
3. ALL STATION LOCATIONS FOR CATENARY POLES AND ASSOCIATED DEVICES LOCATED ON A PIER OR MOUNTED SUPERSTRUCTURE ARE APPROXIMATE. SEE THE STRUCTURAL PLANS FOR EXACT LOCATION AND LAYOUT.

NOT FOR CONSTRUCTION

SERIES SYSPL-6 OF SYSPL-38

PLOT DATE: 7/19/2017 9:02:02 PM JKIELLMA

HDR Engineering, Inc.
8550 W Bryn Mawr Ave., Suite 900
Chicago, IL 60631
www.hdrinc.com

Burns
BURNS ENGINEERING, INC. | 215 979-7700
TWO COMMERCE SQUARE, 2001 MARKET ST, SUITE 600
PHILADELPHIA, PA 19103

ISSUE	DATE	DESCRIPTION

NICTD
NORTHERN INDIANA COMMUTER TRANSPORTATION DISTRICT
33 East Highway 12
Chesterton, Indiana 46304

WEST LAKE CORRIDOR
DYER TO HAMMOND, INDIANA

DESIGNED: RSW
DRAWN: VJC
CHECKED: MP
DATE: 07/21/17

NICTD - WEST LAKE CORRIDOR - MP WL 61.38 TO WL 69.18
SINGLE TRACK

PLAN STA 3308+25 TO 3322+25 SYSTEM

FILENAME SHT_WL_OCS_PL_106.dgn
SCALE AS NOTED
SHEET 20 OF 248

SIGNAL POWER ASSEMBLY			
MISC. ASSEMBLIES AND FEEDERS 2			
MISC. ASSEMBLIES AND FEEDERS 1			
JUMPERS			
HANGERS			
SUPPORT REGISTRATION REFERENCE			
DOWN GUY ASSEMBLY		449-2	449-2
IN-SPAN ASSEMBLIES			
TERMINATION HEIGHT			
FOUNDATION REFERENCE			
POLE REFERENCE		525-40-8	525-40-8
STAGGER			
MESSENGER WIRE HEIGHT			
TROLLEY WIRE HEIGHT			
FACE OF POLE TO CENTERLINE TRACK		9'-0"	9'-0"
STATIONING		3333+94	3335+84
STRUCTURE NO.		63-06	63-07

TO MUNSTER/DYER

TO HAMMOND GATEWAY

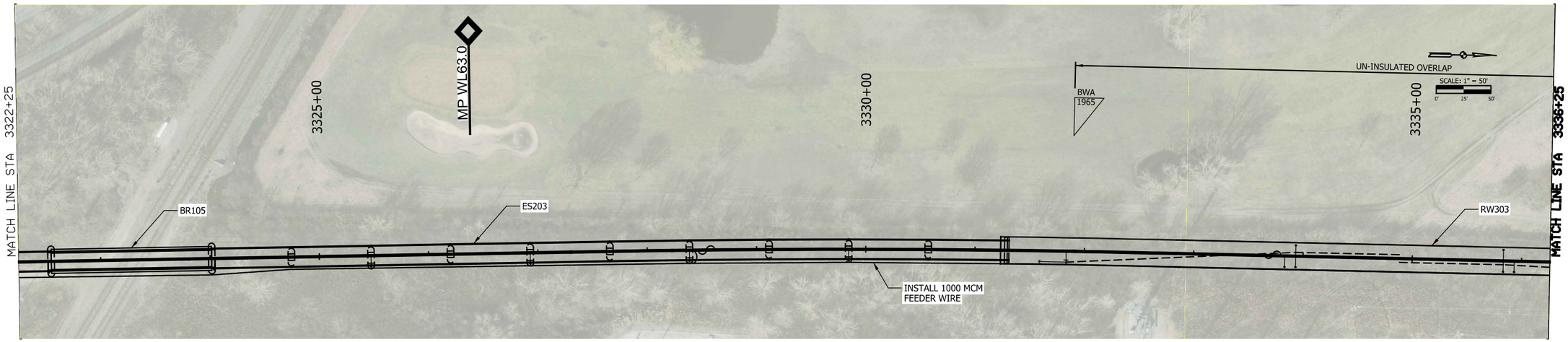

STRUCTURE NO.	62-30	62-31	62-32	63-01	63-02	63-03	63-04	63-05	63-06	63-07	63-08
STATIONING	3322+54	3324+02	3325+47	3326+93	3328+39	3329+84	3331+84	3333+84	3333+94	3335+84	3335+94
FACE OF POLE TO CENTERLINE TRACK	X'-X"	X'-X"	X'-X"	X'-X"	X'-X"	X'-X"	9'-0"	9'-0"	9'-0"	9'-0"	9'-0"
TROLLEY WIRE HEIGHT	21'-0"	21'-0"	21'-0"	21'-0"	21'-0"	21'-0"	21'-0"	21'-0"	21'-11	21'-11"	21'-0"
MESSENGER WIRE HEIGHT	24'-0"	24'-0"	24'-0"	24'-0"	24'-0"	24'-0"	24'-6"	25'-6"	24'-6"	25'-6"	24'-6"
STAGGER	▼ 6"	▲ 6"	▼ 6"	▲ 6"	▼ 6"	▼ 6"	▲ 6"	▼ 6"	▲ 6"	▼ 6"	▲ 6"
POLE REFERENCE	501-2-30	501-2-30	501-2-30	501-2-30	501-2-30	501-2-30	500-35	501-3-30	501-4-30	501-4-30	501-3-30
FOUNDATION REFERENCE	522-X	522-X	522-X	522-X	522-X	522-X	523-DGA 521-15				
TERMINATION HEIGHT							26'-0"				
IN-SPAN ASSEMBLIES											
DOWN GUY ASSEMBLY							449-1				
SUPPORT REGISTRATION REFERENCE	400-1	401-1	400-1	401-1	400-1	400-1	401-1	401-1	406-1	406-1	400-1
HANGERS	210-148	210-144=5	210-146	210-146	210-145	210-200	210-200, 213-210	(2)214-200			
JUMPERS					428-2			428-1			
MISC. ASSEMBLIES AND FEEDERS 1					462-2		441-1	462-2			
MISC. ASSEMBLIES AND FEEDERS 2	460-2	460-2	460-2	460-2	460-2	460-2	460-2	460-2			460-2
SIGNAL POWER ASSEMBLY											

OCS PLAN SHEET

NOTES

1. INSTALL NICTD PARALLEL FEEDER PER PLANS.
2. INSTALL NICTD FIBER OPTIC LINES PER PLANS.
3. ALL STATION LOCATIONS FOR CATENARY POLES AND ASSOCIATED DEVICES LOCATED ON A PIER OR MOUNTED SUPERSTRUCTURE ARE APPROXIMATE. SEE THE STRUCTURAL PLANS FOR EXACT LOCATION AND LAYOUT.

NOT FOR CONSTRUCTION

SERIES SYSPL-7 OF SYSPL-38

JKIELLMA

PLOT DATE: 7/19/2017 9:02:34 PM

HDR Engineering, Inc.
8550 W Bryn Mawr Ave., Suite 900
Chicago, IL 60631
www.hdrinc.com

Burns
BURNS ENGINEERING, INC. | 215 979-7700
TWO COMMERCE SQUARE, 2001 MARKET ST, SUITE 600
PHILADELPHIA, PA 19103

ISSUE	DATE	DESCRIPTION

NICTD
NORTHERN INDIANA COMMUTER TRANSPORTATION DISTRICT
33 East Highway 12
Chesterton, Indiana 46304

WEST LAKE CORRIDOR
DYER TO HAMMOND, INDIANA

DESIGNED: RSW
DRAWN: VJC
CHECKED: MP
DATE: 07/21/17

NICTD - WEST LAKE CORRIDOR - MP WL 61.38 TO WL 69.18
SINGLE TRACK

PLAN STA 3322+25 TO 3336+25 SYSTEM

FILENAME SHT_WL_OCS_PL_107.dgn
SCALE AS NOTED
SHEET 21 OF 248

SIGNAL POWER ASSEMBLY		
MISC. ASSEMBLIES AND FEEDERS 2	461-2	460-1
MISC. ASSEMBLIES AND FEEDERS 1	508-X	
JUMPERS		
HANGERS	210-172	
SUPPORT REGISTRATION REFERENCE	416-6, 417-1, 417-2-42"	401-1
DOWN GUY ASSEMBLY	449-1	449-1
IN-SPAN ASSEMBLIES		
TERMINATION HEIGHT		
FOUNDATION REFERENCE		
POLE REFERENCE	525-40-8	525-40-8
STAGGER	▲ 6"	▲ 8"
MESSENGER WIRE HEIGHT	24'-6"	24'-6"
TROLLEY WIRE HEIGHT	21'-0"	21'-0"
FACE OF POLE TO CENTERLINE TRACK	9'-0"	9'-0"
STATIONING	3348+22	3349+94
STRUCTURE NO.	63-15	63-16

TO MUNSTER/DYER

TO HAMMOND GATEWAY

STRUCTURE NO.	63-09	63-10	63-11	63-12	63-13	63-14	63-15
STATIONING	3337+84	3339+59	3341+34	3343+09	3344+80	3346+44	3348+22
FACE OF POLE TO CENTERLINE TRACK	9'-0"	9'-0"	9'-0"	9'-0"	9'-0"	9'-0"	9'-0"
TROLLEY WIRE HEIGHT	21'-0"	21'-0"	21'-0"	21'-0"	21'-0"	21'-0"	
MESSENGER WIRE HEIGHT	24'-0"	24'-0"	24'-0"	24'-0"	24'-0"	24'-6"	
STAGGER	▼ 6"	▼ 8"	▼ 8"	▼ 6"	▲ 6"	▼ 6"	
POLE REFERENCE	500-35	525-40-8	525-40-8	525-40-8	525-40-8	525-40-8	525-40-8
FOUNDATION REFERENCE	521-15 523-DGA						
TERMINATION HEIGHT	26'-0"						
IN-SPAN ASSEMBLIES							
DOWN GUY ASSEMBLY	449-1	449-1	449-1		449-1	449-1	449-1
SUPPORT REGISTRATION REFERENCE	401-1	401-1	401-1	401-1	400-1	400-1	
HANGERS	210-190, 213-200	210-175	210-175	210-175	210-171	210-164	210-178
JUMPERS			428-2				
MISC. ASSEMBLIES AND FEEDERS 1	441-1		462-2				508-X, 503-1
MISC. ASSEMBLIES AND FEEDERS 2	460-2	460-1	460-1	460-1	460-1	460-1	461-2, 429-1, 429-6
SIGNAL POWER ASSEMBLY							

OCS PLAN SHEET

NOTES

1. INSTALL NICTD PARALLEL FEEDER PER PLANS.
2. INSTALL NICTD FIBER OPTIC LINES PER PLANS.

JKOELLMA

PLOT DATE: 7/19/2017 9:03:02 PM

NOT FOR CONSTRUCTION

SERIES SYSPL-8 OF SYSPL-38

HDR Engineering, Inc.
8550 W Bryn Mawr Ave., Suite 900
Chicago, IL 60631
www.hdrinc.com

Burns
BURNS ENGINEERING, INC. | 215 979-7700
TWO COMMERCE SQUARE, 2001 MARKET ST, SUITE 600
PHILADELPHIA, PA 19103

ISSUE	DATE	DESCRIPTION

NICTD
NORTHERN INDIANA COMMUTER TRANSPORTATION DISTRICT
33 East Highway 12
Chesterton, Indiana 46304

WEST LAKE CORRIDOR
DYER TO HAMMOND, INDIANA

DESIGNED: RSW
DRAWN: VJC
CHECKED: MP
DATE: 07/21/17

NICTD - WEST LAKE CORRIDOR - MP WL 61.38 TO WL 69.18
SINGLE TRACK

PLAN STA 3336+25 TO 3350+25 SYSTEM

FILENAME SHT_WL_OCS_PL_108.dgn
SCALE AS NOTED

SHEET 22 OF 248

SIGNAL POWER ASSEMBLY								
MISC. ASSEMBLIES AND FEEDERS 2	460-1	460-1	460-1	460-1	460-1	460-1	460-1	
MISC. ASSEMBLIES AND FEEDERS 1	410-1		462-2				462-2	
JUMPERS			428-2				428-2	
HANGERS	210-175	210-182	210-175	210-175	210-176	210-199	210-200	210-200
SUPPORT REGISTRATION REFERENCE	416-1, 417-1, 417-2-42"	401-1	401-1	400-1	401-1	400-1	401-1	
DOWN GUY ASSEMBLY		449-1						
IN-SPAN ASSEMBLIES								
TERMINATION HEIGHT								
FOUNDATION REFERENCE								
POLE REFERENCE	525-40-8	525-40-8	525-40-8	525-40-8	525-40-8	525-40-8	525-40-8	
STAGGER	▲ 6"	▲ 6"	0"	▼ 6"	▲ 6"	▼ 6"	▲ 6"	
MESSENGER WIRE HEIGHT	24'-0"	24'-0"	24'-0"	24'-0"	24'-6"	24'-6"	24'-6"	
TROLLEY WIRE HEIGHT	21'-0"	21'-0"	21'-0"	21'-0"	21'-0"	21'-0"	21'-0"	
FACE OF POLE TO CENTERLINE TRACK	9'-0"	9'-0"	9'-0"	9'-0"	9'-0"	9'-0"	9'-0"	
STATIONING	3351+69	3353+51	3355+26	3357+01	3358+77	3360+76	3362+76	
STRUCTURE NO.	63-17	63-18	63-19	63-20	63-21	63-22	63-23	

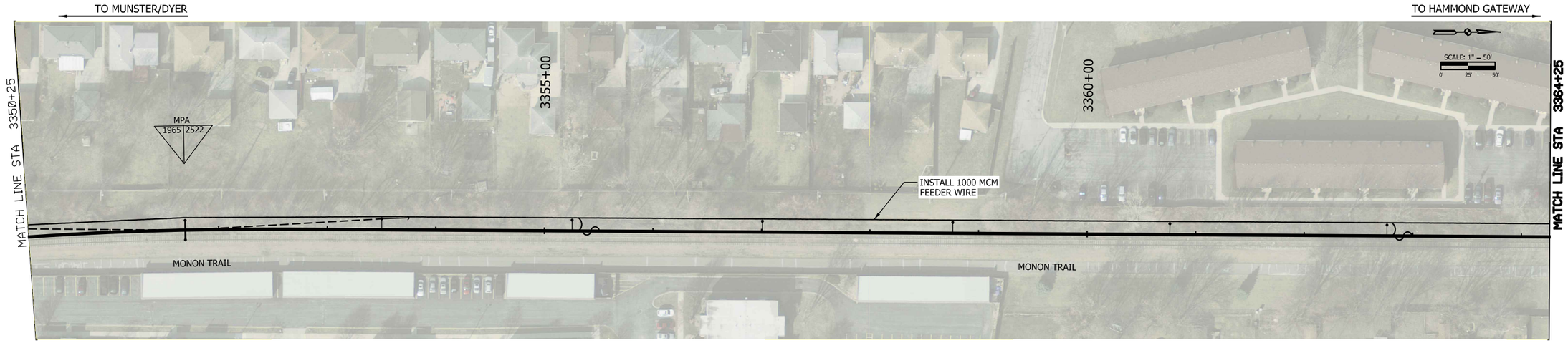

STRUCTURE NO.	63-17
STATIONING	3351+69
FACE OF POLE TO CENTERLINE TRACK	9'-0"
TROLLEY WIRE HEIGHT	
MESSENGER WIRE HEIGHT	
STAGGER	
POLE REFERENCE	525-40-8
FOUNDATION REFERENCE	
TERMINATION HEIGHT	
IN-SPAN ASSEMBLIES	
DOWN GUY ASSEMBLY	
SUPPORT REGISTRATION REFERENCE	
HANGERS	
JUMPERS	
MISC. ASSEMBLIES AND FEEDERS 1	
MISC. ASSEMBLIES AND FEEDERS 2	503-1
SIGNAL POWER ASSEMBLY	

OCS PLAN SHEET

NOTES

1. INSTALL NICTD PARALLEL FEEDER PER PLANS.
2. INSTALL NICTD FIBER OPTIC LINES PER PLANS.

NOT FOR CONSTRUCTION

SERIES SYSPL-9 OF SYSPL-38

JKIELLMA

PLOT DATE: 7/19/2017 9:03:53 PM

HDR Engineering, Inc.
8550 W Bryn Mawr Ave., Suite 900
Chicago, IL 60631
www.hdrinc.com

Burns
BURNS ENGINEERING, INC. | 215 979-7700
TWO COMMERCE SQUARE, 2001 MARKET ST, SUITE 600
PHILADELPHIA, PA 19103

ISSUE	DATE	DESCRIPTION

NICTD
NORTHERN INDIANA COMMUTER TRANSPORTATION DISTRICT
33 East Highway 12
Chesterton, Indiana 46304

WEST LAKE CORRIDOR
DYER TO HAMMOND, INDIANA

DESIGNED: RSW
DRAWN: VJC
CHECKED: MP
DATE: 07/21/17

NICTD - WEST LAKE CORRIDOR - MP WL 61.38 TO WL 69.18
SINGLE TRACK

PLAN STA 3350+25 TO 3364+25
SYSTEM

FILENAME SHT_WL_OCS_PL_109.dgn
SCALE AS NOTED

SHEET 23 OF 248

SIGNAL POWER ASSEMBLY									
MISC. ASSEMBLIES AND FEEDERS 2	460-1	460-1	460-1	460-2	460-1	460-1	460-1	460-1	460-2
MISC. ASSEMBLIES AND FEEDERS 1			462-2	441-1				462-2	441-1
JUMPERS			428-2					428-1	
HANGERS	210-200	210-200	210-200	210-200, 213-210		(2) 214-200		210-190, 213-200	210-200
SUPPORT REGISTRATION REFERENCE	400-1	401-1	400-1	401-1	400-1	406-1	406-1	401-1	400-1
DOWN GUY ASSEMBLY				449-1		449-2	449-2		449-1
IN-SPAN ASSEMBLIES									
TERMINATION HEIGHT				26'-0"					26'-0"
FOUNDATION REFERENCE				521-15					521-15
POLE REFERENCE	525-40-8	525-40-8	525-40-8	500-35	525-40-8	525-40-8	525-40-8	525-40-8	500-35
STAGGER	▼ 6"	▲ 6"	▼ 6"	▲ 6"	▼ 6"	▲ 6"	▼ 6"	▲ 6"	▼ 6"
MESSENGER WIRE HEIGHT	24'-6"	24'-6"	24'-6"	24'-6"	24'-6"	25'-6"	24'-6"	25'-6"	24'-0"
TROLLEY WIRE HEIGHT	21'-0"	21'-0"	21'-0"	21'-0"	21'-0"	21'-11"	21'-11"	21'-0"	21'-0"
FACE OF POLE TO CENTERLINE TRACK	9'-0"	9'-0"	9'-0"	9'-0"	9'-0"	9'-0"	9'-0"	9'-0"	9'-0"
STATIONING	3364+76	3366+76	3368+76	3370+76	3372+76	3372+86	3374+76	3374+86	3376+76
STRUCTURE NO.	63-24	63-25	63-26	63-27	63-28	63-29	63-30	63-31	63-32

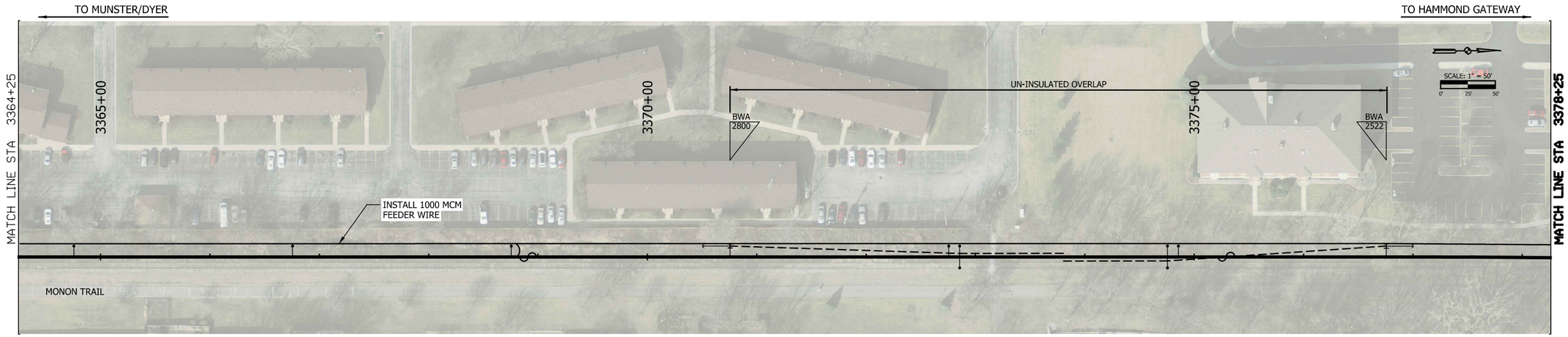

STRUCTURE NO.	63-29	63-30
STATIONING	3372+86	3374+76
FACE OF POLE TO CENTERLINE TRACK	9'-0"	9'-0"
TROLLEY WIRE HEIGHT		
MESSENGER WIRE HEIGHT		
STAGGER		
POLE REFERENCE	525-40-8	525-40-8
FOUNDATION REFERENCE		
TERMINATION HEIGHT		
IN-SPAN ASSEMBLIES		
DOWN GUY ASSEMBLY	449-2	449-2
SUPPORT REGISTRATION REFERENCE		
HANGERS		
JUMPERS		
MISC. ASSEMBLIES AND FEEDERS 1		
MISC. ASSEMBLIES AND FEEDERS 2		
SIGNAL POWER ASSEMBLY		

OCS PLAN SHEET

NOTES

1. INSTALL NICTD PARALLEL FEEDER PER PLANS.
2. INSTALL NICTD FIBER OPTIC LINES PER PLANS.

NOT FOR CONSTRUCTION

SERIES SYSPL-10 OF SYSPL-38

JKIELLMA

PLOT DATE: 7/19/2017 9:04:33 PM

HDR Engineering, Inc.
8550 W Bryn Mawr Ave., Suite 900
Chicago, IL 60631
www.hdrinc.com

Burns
BURNS ENGINEERING, INC. | 215 979-7700
TWO COMMERCE SQUARE, 2001 MARKET ST, SUITE 600
PHILADELPHIA, PA 19103

ISSUE	DATE	DESCRIPTION

NICTD
NORTHERN INDIANA COMMUTER TRANSPORTATION DISTRICT
33 East Highway 12
Chesterton, Indiana 46304

WEST LAKE CORRIDOR
DYER TO HAMMOND, INDIANA

DESIGNED: RSW
DRAWN: VJC
CHECKED: MP
DATE: 07/21/17

NICTD - WEST LAKE CORRIDOR - MP WL 61.38 TO WL 69.18
SINGLE TRACK

PLAN STA 3364+25 TO 3378+25
SYSTEM

FILENAME SHT_WL_OCS_PL_110.dgn
SCALE AS NOTED

SHEET 24 OF 248

SIGNAL POWER ASSEMBLY				
MISC. ASSEMBLIES AND FEEDERS 2	460-1	460-1	460-1	461-2
MISC. ASSEMBLIES AND FEEDERS 1				508-X
JUMPERS				
HANGERS	210-200	210-200	210-200	
SUPPORT REGISTRATION REFERENCE	401-1	400-1	401-1	416-6, 417-1, 417-2-42"
DOWN GUY ASSEMBLY				449-1
IN-SPAN ASSEMBLIES				
TERMINATION HEIGHT				
FOUNDATION REFERENCE				
POLE REFERENCE	525-40-8	525-40-8	525-40-8	525-40-8
STAGGER	▲ 6"	▼ 6"	▲ 6"	▼ 6"
MESSENGER WIRE HEIGHT	24'-6"	24'-6"	24'-6"	24'-6"
TROLLEY WIRE HEIGHT	21'-0"	21'-0"	21'-0"	21'-0"
FACE OF POLE TO CENTERLINE TRACK	9'-0"	9'-0"	9'-0"	9'-0"
STATIONING	3378+76	3380+76	3382+76	3384+76
STRUCTURE NO.	63-33	64-01	64-02	64-03

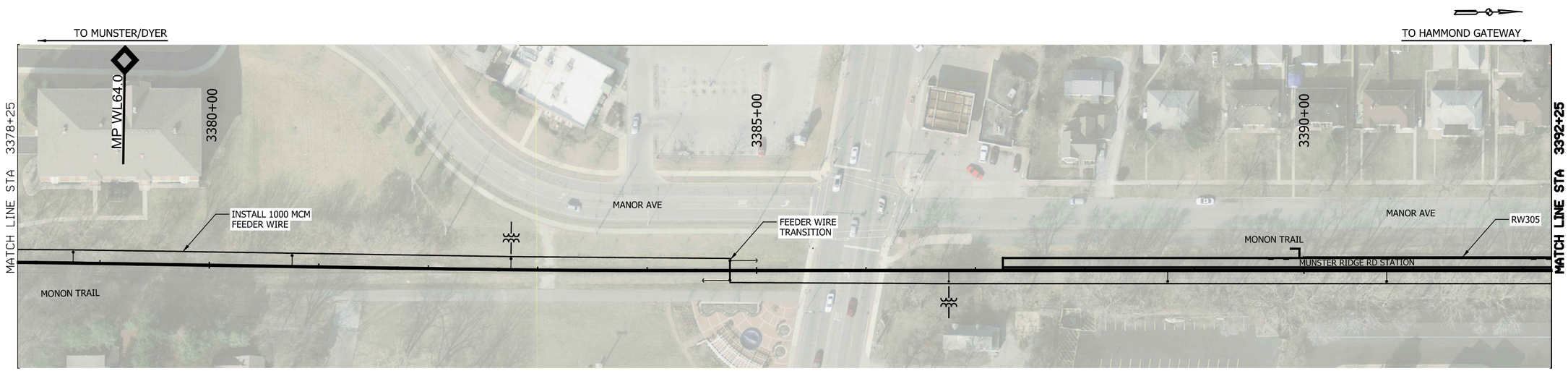

STRUCTURE NO.	64-03	64-04	64-05	64-06	
STATIONING	3384+76	3386+76	3388+76	3390+76	
FACE OF POLE TO CENTERLINE TRACK	9'-0"	9'-0"	9'-0"	9'-0"	
TROLLEY WIRE HEIGHT		21'-0"	21'-0"	21'-0"	
MESSENGER WIRE HEIGHT		24'-6"	24'-6"	24'-6"	
STAGGER		▲ 6"	▼ 6"	▲ 6"	
POLE REFERENCE	525-40-8	525-40-8	525-40-8	525-40-8	
FOUNDATION REFERENCE					
TERMINATION HEIGHT					
IN-SPAN ASSEMBLIES					
DOWN GUY ASSEMBLY	449-1				
SUPPORT REGISTRATION REFERENCE		400-1	401-1	400-1	
HANGERS	210-200	210-200	210-200	210-200	
JUMPERS					
MISC. ASSEMBLIES AND FEEDERS 1	508-X, 503-1				
MISC. ASSEMBLIES AND FEEDERS 2	461-2, 429-1, 429-6	460-1	460-1	460-1	
SIGNAL POWER ASSEMBLY					

OCS PLAN SHEET

NOTES

1. XXXX
2. XXXX
3. XXXX
4. XXXX

NOT FOR CONSTRUCTION

SERIES SYSPL-11 OF SYSPL-38

JKIELLMA

PLOT DATE: 7/19/2017 9:05:19 PM

HDR Engineering, Inc.
8550 W Bryn Mawr Ave., Suite 900
Chicago, IL 60631
www.hdrinc.com

Burns
BURNS ENGINEERING, INC. | 215 979-7700
TWO COMMERCE SQUARE, 2001 MARKET ST, SUITE 600
PHILADELPHIA, PA 19103

ISSUE	DATE	DESCRIPTION

NICTD
NORTHERN INDIANA COMMUTER TRANSPORTATION DISTRICT
33 East Highway 12
Chesterton, Indiana 46304

WEST LAKE CORRIDOR
DYER TO HAMMOND, INDIANA

DESIGNED: RSW
DRAWN: VJC
CHECKED: MP
DATE: 07/21/17

NICTD - WEST LAKE CORRIDOR - MP WL 61.38 TO WL 69.18
SINGLE TRACK

PLAN STA 3378+25 TO 3392+25 SYSTEM

FILENAME SHT_WL_OCS_PL_111.dgn
SCALE AS NOTED
SHEET 25 OF 248

SIGNAL POWER ASSEMBLY	
MISC. ASSEMBLIES AND FEEDERS 2	503-1
MISC. ASSEMBLIES AND FEEDERS 1	
JUMPERS	
HANGERS	
SUPPORT REGISTRATION REFERENCE	
DOWN GUY ASSEMBLY	
IN-SPAN ASSEMBLIES	
TERMINATION HEIGHT	
FOUNDATION REFERENCE	
POLE REFERENCE	525-40-8
STAGGER	
MESSENGER WIRE HEIGHT	
TROLLEY WIRE HEIGHT	
FACE OF POLE TO CENTERLINE TRACK	9'-0"
STATIONING	3698+76
STRUCTURE NO.	64-10

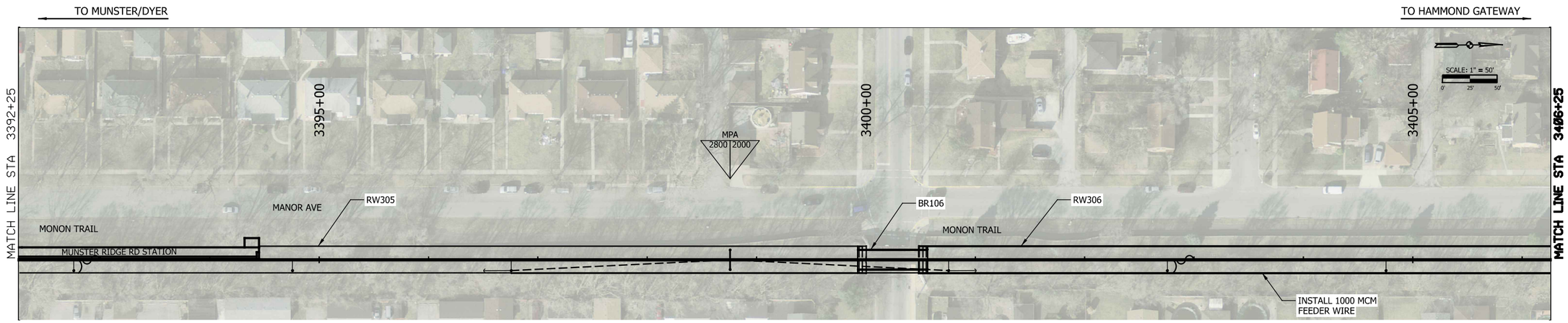

STRUCTURE NO.	64-07	64-08	64-09	64-10	64-11	64-12	64-13
STATIONING	3392+76	3394+76	3396+76	3398+76	3400+76	3402+76	3404+76
FACE OF POLE TO CENTERLINE TRACK	9'-0"	9'-0"	9'-0"	9'-0"	9'-0"	9'-0"	9'-0"
TROLLEY WIRE HEIGHT	21'-0"	21'-0"	21'-0"	21'-0"	21'-0"	21'-0"	21'-0"
MESSENGER WIRE HEIGHT	24'-6"	24'-6"	24'-6"	24'-0"	24'-6"	24'-6"	24'-6"
STAGGER	▼ 6"	▲ 6"	▼ 6"	▲ 6"	▼ 6"	▲ 6"	▼ 6"
POLE REFERENCE	525-40-8	525-40-8	525-40-8	525-40-8	501-3-30	501-2-30	501-2-30
FOUNDATION REFERENCE					523-XX 523-DGA	523-XX	523-XX
TERMINATION HEIGHT							
IN-SPAN ASSEMBLIES							
DOWN GUY ASSEMBLY		449-1	449-1		449-1		
SUPPORT REGISTRATION REFERENCE	400-1	401-1	400-1	416-1, 417-1, 417-2-42"	400-1	401-1	400-1
HANGERS	210-200	210-200	210-200	210-200	210-200	210-200	210-195
JUMPERS	428-2					428-2	
MISC. ASSEMBLIES AND FEEDERS 1	462-2			410-1		462-2	
MISC. ASSEMBLIES AND FEEDERS 2	460-1	460-1	460-1	460-1	460-2	460-2	460-2
SIGNAL POWER ASSEMBLY							

OCS PLAN SHEET

NOTES

1. ALL STATION LOCATIONS FOR CATENARY POLES AND ASSOCIATED DEVICES LOCATED ON A PIER OR MOUNTED SUPERSTRUCTURE ARE APPROXIMATE. SEE THE STRUCTURAL PLANS FOR EXACT LOCATION AND LAYOUT.

NOT FOR CONSTRUCTION

SERIES SYSPL-12 OF SYSPL-38

JKIELLMA

PLOT DATE: 7/19/2017 9:05:52 PM

HDR Engineering, Inc.
8550 W Bryn Mawr Ave., Suite 900
Chicago, IL 60631
www.hdrinc.com

Burns
BURNS ENGINEERING, INC. | 215 979-7700
TWO COMMERCE SQUARE, 2001 MARKET ST, SUITE 600
PHILADELPHIA, PA 19103

ISSUE	DATE	DESCRIPTION

NICTD
NORTHERN INDIANA COMMUTER TRANSPORTATION DISTRICT
33 East Highway 12
Chesterton, Indiana 46304

WEST LAKE CORRIDOR
DYER TO HAMMOND, INDIANA

DESIGNED: RSW
DRAWN: VJC
CHECKED: MP
DATE: 07/21/17

NICTD - WEST LAKE CORRIDOR - MP WL 61.38 TO WL 69.18
SINGLE TRACK

PLAN STA 3392+25 TO 3406+25 SYSTEM

FILENAME SHT_WL_OCS_PL_112.dgn
SCALE AS NOTED
SHEET 26 OF 248

SIGNAL POWER ASSEMBLY		
MISC. ASSEMBLIES AND FEEDERS 2		
MISC. ASSEMBLIES AND FEEDERS 1		
JUMPERS		
HANGERS		
SUPPORT REGISTRATION REFERENCE		
DOWN GUY ASSEMBLY	449-2	449-2
IN-SPAN ASSEMBLIES		
TERMINATION HEIGHT		
FOUNDATION REFERENCE	523-XX	523-XX
POLE REFERENCE	501-1-30	501-1-30
STAGGER		
MESSENGER WIRE HEIGHT		
TROLLEY WIRE HEIGHT		
FACE OF POLE TO CENTERLINE TRACK	9'-0"	9'-0"
STATIONING	3414+86	3416+76
STRUCTURE NO.	64-19	64-20

STRUCTURE NO.	64-14	64-15	64-16	64-17	64-18	64-19	64-20	64-21	64-22	
STATIONING	3406+71	3408+76	3410+76	3412+76	3414+76	3414+86	3416+76	3416+86	3418+76	
FACE OF POLE TO CENTERLINE TRACK	9'-0"	9'-0"	9'-0"	9'-0"	9'-0"	9'-0"	9'-0"	9'-0"	9'-0"	
TROLLEY WIRE HEIGHT	21'-0"	20'-9"	20'-3"	19'-9"	19'-9"	20'-10"	20'-10"	19'-9"	19'-9"	
MESSENGER WIRE HEIGHT	24'-0"	23'-9"	23'-3"	22'-9"	24'-3"	23'-3"	23'-3"	24'-3"	22'-9"	
STAGGER	▼ 6"	▲ 6"	▼ 6"	0"	▲ 6"	▼ 6"	▲ 6"	▼ 6"	▲ 6"	
POLE REFERENCE	525-40-8	525-40-8	525-40-8	500-35	525-40-8	525-40-8	525-40-8	525-40-8	500-35	
FOUNDATION REFERENCE				521-15					521-15	
TERMINATION HEIGHT				26'-0"					26'-0"	
IN-SPAN ASSEMBLIES										
DOWN GUY ASSEMBLY				449-1		449-2	449-2		449-1	
SUPPORT REGISTRATION REFERENCE	401-1	400-1	401-1	400-1	400-1	406-1	406-1	401-1	400-1	
HANGERS	210-205	210-200	210-200	210-200, 213-210		(2) 214-200		210-190, 213-200		210-185
JUMPERS			428-2					428-1		
MISC. ASSEMBLIES AND FEEDERS 1			462-2	441-1				462-2	441-1	
MISC. ASSEMBLIES AND FEEDERS 2	460-1	460-1	460-1	460-2	460-1	460-1	460-1	460-1	460-2	
SIGNAL POWER ASSEMBLY										

OCS PLAN SHEET

NOTES

1. XXXX
2. XXXX
3. XXXX
4. XXXX

NOT FOR CONSTRUCTION

SERIES SYSPL-13 OF SYSPL-38

JKIELLMA

PLOT DATE: 7/21/2017 9:28:56 AM

HDR Engineering, Inc.
8550 W Bryn Mawr Ave., Suite 900
Chicago, IL 60631
www.hdrinc.com

Burns
BURNS ENGINEERING, INC. | 215 979-7700
TWO COMMERCE SQUARE, 2001 MARKET ST, SUITE 600
PHILADELPHIA, PA 19103

ISSUE	DATE	DESCRIPTION

NICTD
NORTHERN INDIANA COMMUTER TRANSPORTATION DISTRICT
33 East Highway 12
Chesterton, Indiana 46304

WEST LAKE CORRIDOR
DYER TO HAMMOND, INDIANA

DESIGNED: RSW
DRAWN: VJC
CHECKED: MP
DATE: 07/21/17

NICTD - WEST LAKE CORRIDOR - MP WL 61.38 TO WL 69.18
SINGLE TRACK

PLAN STA 3406+25 TO 3420+25 SYSTEM

FILENAME SHT_WL_OCS_PL_113.dgn
SCALE AS NOTED
SHEET 27 OF 248

| | | |

SIGNAL POWER ASSEMBLY								
MISC. ASSEMBLIES AND FEEDERS 2	460-1	460-1	460-1	460-1	460-1	460-1	460-1	460-1
MISC. ASSEMBLIES AND FEEDERS 1		462-2		410-1			462-2	
JUMPERS		428-2					428-2	
HANGERS	210-177	210-178	210-177	210-178	210-177	210-178	210-177	210-150
SUPPORT REGISTRATION REFERENCE	400-1	401-1	400-1	416-1, 417-1, 417-2-42"	400-1	401-1	400-1	401-1
DOWN GUY ASSEMBLY			449-1		449-1			
IN-SPAN ASSEMBLIES								
TERMINATION HEIGHT								
FOUNDATION REFERENCE								
POLE REFERENCE	525-40-8	525-40-8	525-40-8	525-40-8	525-40-8	525-40-8	525-40-8	525-40-8
STAGGER	▼ 6"	▲ 6"	▼ 6"	▲ 6"	▼ 6"	▲ 6"	▼ 6"	▲ 6"
MESSENGER WIRE HEIGHT	19'-7"	20'-7"	21'-0"	21'-5"	21'-10"	19'-3"	19'-8"	20'-1"
TROLLEY WIRE HEIGHT	17'-2"	17'-7"	18'-0"	18'-5"	18'-10"	22'-3"	22'-8"	23'-1"
FACE OF POLE TO CENTERLINE TRACK	9'-0"	9'-0"	9'-0"	9'-0"	9'-0"	9'-0"	9'-0"	9'-0"
STATIONING	3435+10	3436+87	3438+65	3440+42	3442+20	3443+97	3445+75	3447+52
STRUCTURE NO.	65-03	65-04	65-05	65-06	65-07	65-08	65-09	65-10

TO MUNSTER/DYER

TO HAMMOND GATEWAY

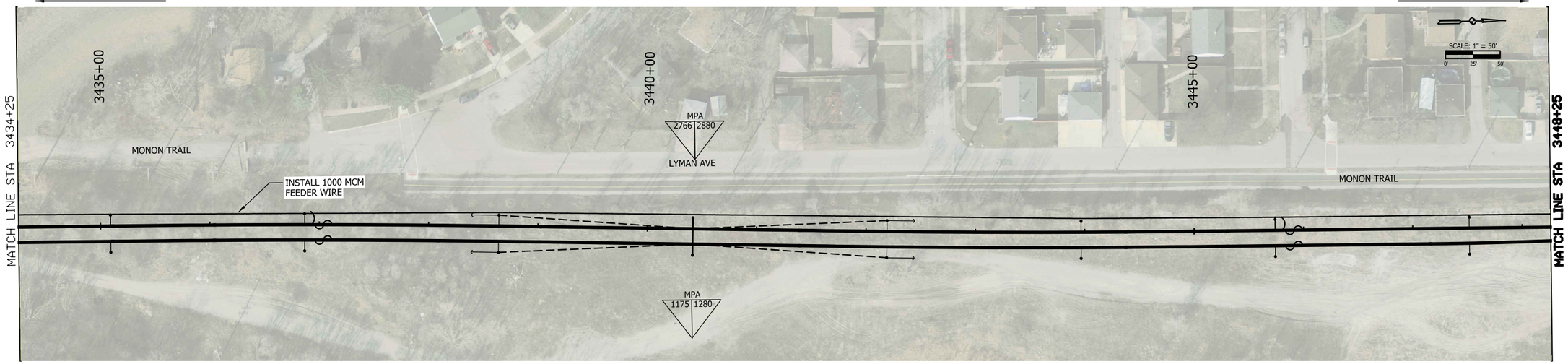

STRUCTURE NO.	65-03	65-04	65-05	65-06	64-07	65-08	65-09	65-10
STATIONING	3435+10	3436+87	3438+65	3440+42	3442+20	3443+97	3445+75	3447+52
FACE OF POLE TO CENTERLINE TRACK	9'-0"	9'-0"	9'-0"	9'-0"	9'-0"	9'-0"	9'-0"	9'-0"
TROLLEY WIRE HEIGHT	17'-2"	17'-7"	18'-0"	18'-5"	18'-10"	19'-3"	19'-8"	20'-1"
MESSENGER WIRE HEIGHT	19'-7"	20'-7"	21'-0"	21'-5"	21'-10"	22'-3"	22'-8"	23'-1"
STAGGER	▼ 6"	▲ 6"	▼ 6"	▲ 6"	▼ 6"	▲ 6"	▼ 6"	▲ 6"
POLE REFERENCE	525-40-8	525-40-8	525-40-8	525-40-8	525-40-8	525-40-8	525-40-8	525-40-8
FOUNDATION REFERENCE								
TERMINATION HEIGHT								
IN-SPAN ASSEMBLIES								
DOWN GUY ASSEMBLY			449-1		449-1			
SUPPORT REGISTRATION REFERENCE	401-1	400-1	401-1	416-1, 417-2-42	401-1	400-1	401-1	400-1
HANGERS	210-177	210-178	210-177	210-178	210-177	210-178	210-177	210-150
JUMPERS		428-2					428-2	
MISC. ASSEMBLIES AND FEEDERS 1				410-1				
MISC. ASSEMBLIES AND FEEDERS 2				503-1				
SIGNAL POWER ASSEMBLY								

OCS PLAN SHEET

NOTES

1. XXXX
2. XXXX
3. XXXX
4. XXXX

NOT FOR CONSTRUCTION

SERIES SYSPL-15 OF SYSPL-38

JKELLMA

PLOT DATE: 7/19/2017 9:07:57 PM

HDR Engineering, Inc.
8550 W Bryn Mawr Ave., Suite 900
Chicago, IL 60631
www.hdrinc.com

Burns
BURNS ENGINEERING, INC. | 215 979-7700
TWO COMMERCE SQUARE, 2001 MARKET ST, SUITE 600
PHILADELPHIA, PA 19103

ISSUE	DATE	DESCRIPTION

NICTD
NORTHERN INDIANA COMMUTER TRANSPORTATION DISTRICT
33 East Highway 12
Chesterton, Indiana 46304

WEST LAKE CORRIDOR
DYER TO HAMMOND, INDIANA

DESIGNED: RSW
DRAWN: VJC
CHECKED: MP
DATE: 07/21/17

NICTD - WEST LAKE CORRIDOR - MP WL 61.38 TO WL 69.18
SINGLE TRACK

PLAN STA 3434+25 TO 3448+25 SYSTEM

FILENAME SHT_WL_OCS_PL_115.dgn
SCALE AS NOTED

SHEET 29 OF 248

SIGNAL POWER ASSEMBLY									
MISC. ASSEMBLIES AND FEEDERS 2	460-1	460-1, 462-2	460-1	460-1	460-1	460-1	460-1	460-1	460-1
MISC. ASSEMBLIES AND FEEDERS 1		503-1			441-1				462-2
JUMPERS									428-2
HANGERS	210-150	210-140		210-130, 213-140		210-200	210-200	210-200	210-200 210-200
SUPPORT REGISTRATION REFERENCE	400-1	416-6, 417-1, 417-2-42"	406-1	401-1	400-1	401-1	400-1	401-1	400-1
DOWN GUY ASSEMBLY					449-1				
IN-SPAN ASSEMBLIES									
TERMINATION HEIGHT									
FOUNDATION REFERENCE					521-15				
POLE REFERENCE	525-40-8	525-40-8	525-40-8	525-40-8	500-35	525-40-8	525-40-8	525-40-8	525-40-8
STAGGER	▼ 6"	▲ 6"	▲ 6"	0"	▼ 6"	▲ 6"	▼ 6"	▲ 6"	▼ 6"
MESSENGER WIRE HEIGHT	23'-6"	23'-9"	24'-6"	24'-0"	24'-0"	24'-6"	24'-6"	24'-6"	24'-6"
TROLLEY WIRE HEIGHT	20'-6"	20'-9"	21'-2"	21'-0"	21'-0"	21'-0"	21'-0"	21'-0"	21'-0"
FACE OF POLE TO CENTERLINE TRACK	9'-0"	9'-0"	9'-0"	9'-0"	9'-0"	9'-0"	9'-0"	9'-0"	9'-0"
STATIONING	3449+02	3450+52	3451+82	3451+92	3453+22	3455+22	3457+22	3459+22	3461+22
STRUCTURE NO.	65-11	65-12	65-13	65-14	65-15	65-16	65-17	65-18	65-19

TO MUNSTER/DYER

TO HAMMOND GATEWAY

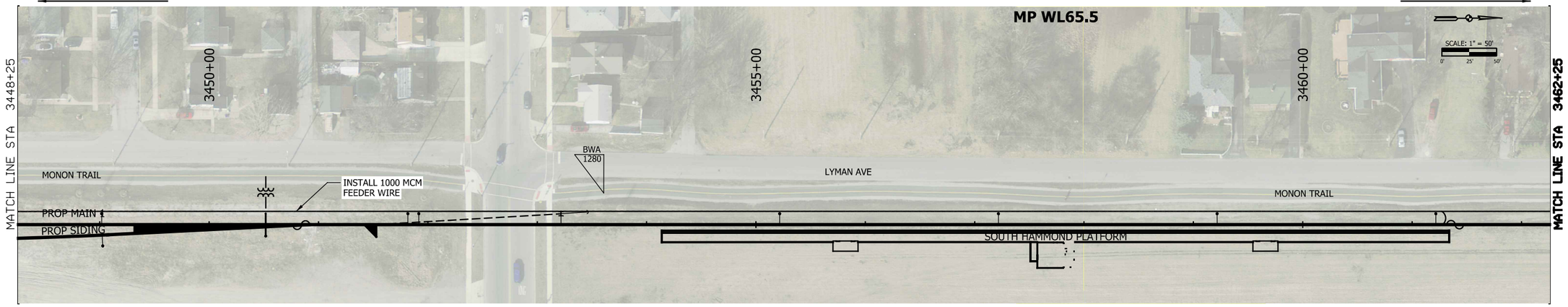

STRUCTURE NO.	65-11	65-12
STATIONING	3449+02	3450+52
FACE OF POLE TO CENTERLINE TRACK	9'-0"	9'-0"
TROLLEY WIRE HEIGHT	20'-6"	20'-9"
MESSENGER WIRE HEIGHT	23'-6"	23'-9"
STAGGER	▼ 6"	0"
POLE REFERENCE	525-40-8	525-40-8
FOUNDATION REFERENCE		
TERMINATION HEIGHT		
IN-SPAN ASSEMBLIES		
DOWN GUY ASSEMBLY		
SUPPORT REGISTRATION REFERENCE	401-1	416-6, 417-2-42"
HANGERS	210-150	210-130
JUMPERS		428-1
MISC. ASSEMBLIES AND FEEDERS 1		
MISC. ASSEMBLIES AND FEEDERS 2		
SIGNAL POWER ASSEMBLY		

OCS PLAN SHEET

NOTES

1. XXXX
2. XXXX
3. XXXX
4. XXXX

NOT FOR CONSTRUCTION

SERIES SYSPL-16 OF SYSPL-38

JKIELLMA

PLOT DATE: 7/19/2017 9:08:43 PM

HDR Engineering, Inc.
8550 W Bryn Mawr Ave., Suite 900
Chicago, IL 60631
www.hdrinc.com

Burns
BURNS ENGINEERING, INC. | 215 979-7700
TWO COMMERCE SQUARE, 2001 MARKET ST, SUITE 600
PHILADELPHIA, PA 19103

ISSUE	DATE	DESCRIPTION

NICTD
NORTHERN INDIANA COMMUTER TRANSPORTATION DISTRICT
33 East Highway 12
Chesterton, Indiana 46304

WEST LAKE CORRIDOR
DYER TO HAMMOND, INDIANA

DESIGNED: RSW
DRAWN: VJC
CHECKED: MP
DATE: 07/21/17

NICTD - WEST LAKE CORRIDOR - MP WL 61.38 TO WL 69.18
SINGLE TRACK

PLAN STA 3448+25 TO 3462+25 SYSTEM

FILENAME SHT_WL_OCS_PL_116.dgn
SCALE AS NOTED

SHEET 30 OF 248

SIGNAL POWER ASSEMBLY									
MISC. ASSEMBLIES AND FEEDERS 2	460-1, 462-2	460-1	460-1	460-1	460-1	460-1	460-1	460-1	460-1
MISC. ASSEMBLIES AND FEEDERS 1	441-1				462-2	441-1			
JUMPERS		428-3			428-3				
HANGERS	210-210, 213-210		(2) 214-200		210-190, 213-200	210-200	210-200	210-200	210-200
SUPPORT REGISTRATION REFERENCE	401-1	400-1	406-1	406-1	401-1	400-1	401-1	400-1	401-1
DOWN GUY ASSEMBLY	449-1					449-1			
IN-SPAN ASSEMBLIES			431-2, 431-3	431-2, 431-3					
TERMINATION HEIGHT	26'-0"					26'-0"			
FOUNDATION REFERENCE	521-15					521-15			
POLE REFERENCE	500-35	525-40-8	525-40-8	525-40-8	525-40-8	500-35	525-40-8	525-40-8	525-40-8
STAGGER	▲ 6"	▼ 6"	▲ 6"	▼ 6"	▲ 6"	▼ 6"	▲ 6"	▼ 6"	▲ 6"
MESSENGER WIRE HEIGHT	24'-0"	24'-6"	25'-6"	24'-6"	25'-6"	24'-6"	24'-6"	24'-6"	24'-6"
TROLLEY WIRE HEIGHT	21'-0"	21'-0"	21'-11"	21'-11"	21'-0"	21'-0"	21'-0"	21'-0"	21'-0"
FACE OF POLE TO CENTERLINE TRACK	9'-0"	9'-0"	9'-0"	9'-0"	9'-0"	9'-0"	9'-0"	9'-0"	9'-0"
STATIONING	3463+22	3465+22	3465+32	3467+22	3467+32	3469+22	3471+22	3473+22	3475+22
STRUCTURE NO.	65-20	65-21	65-22	65-23	65-24	65-25	65-26	65-27	65-28

TO MUNSTER/DYER

TO HAMMOND GATEWAY

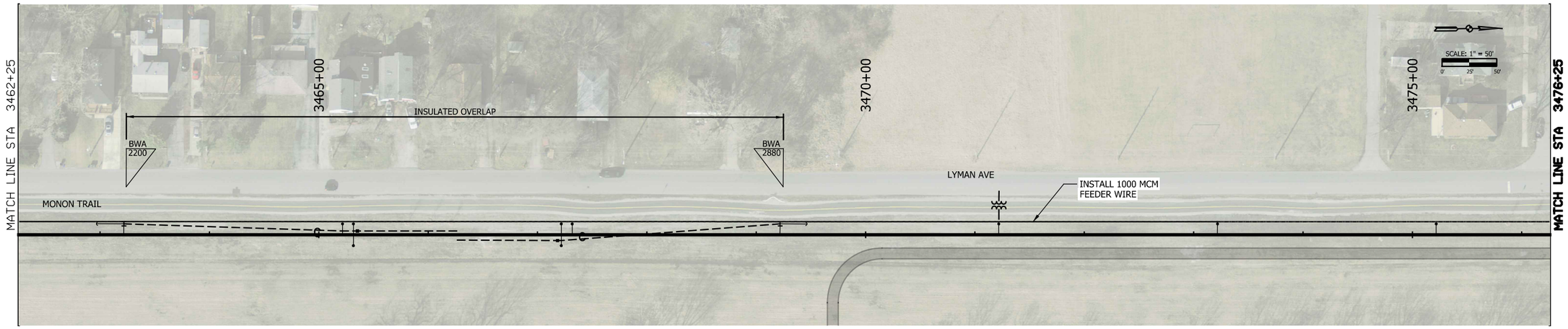

STRUCTURE NO.	65-22	65-23
STATIONING	3465+32	3467+22
FACE OF POLE TO CENTERLINE TRACK	9'-0"	9'-0"
TROLLEY WIRE HEIGHT		
MESSENGER WIRE HEIGHT		
STAGGER		
POLE REFERENCE	525-40-8	525-40-8
FOUNDATION REFERENCE		
TERMINATION HEIGHT		
IN-SPAN ASSEMBLIES		
DOWN GUY ASSEMBLY	449-2	449-2
SUPPORT REGISTRATION REFERENCE		
HANGERS		
JUMPERS		
MISC. ASSEMBLIES AND FEEDERS 1		
MISC. ASSEMBLIES AND FEEDERS 2		
SIGNAL POWER ASSEMBLY		

OCS PLAN SHEET

NOTES

1. XXXX
2. XXXX
3. XXXX
4. XXXX

NOT FOR CONSTRUCTION

SERIES SYSPL-17 OF SYSPL-38

JKOELLMA

PLOT DATE: 7/19/2017 9:09:15 PM

HDR Engineering, Inc.
8550 W Bryn Mawr Ave., Suite 900
Chicago, IL 60631
www.hdrinc.com

Burns
BURNS ENGINEERING, INC. | 215 979-7700
TWO COMMERCE SQUARE, 2001 MARKET ST, SUITE 600
PHILADELPHIA, PA 19103

ISSUE	DATE	DESCRIPTION

NICTD
NORTHERN INDIANA COMMUTER TRANSPORTATION DISTRICT
33 East Highway 12
Chesterton, Indiana 46304

WEST LAKE CORRIDOR
DYER TO HAMMOND, INDIANA

DESIGNED: RSW
DRAWN: VJC
CHECKED: MP
DATE: 07/21/17

NICTD - WEST LAKE CORRIDOR - MP WL 61.38 TO WL 69.18
SINGLE TRACK

PLAN STA 3462+25 TO 3476+25 SYSTEM

FILENAME SHT_WL_OCS_PL_117.dgn
SCALE AS NOTED

SHEET 31 OF 248

SIGNAL POWER ASSEMBLY							
MISC. ASSEMBLIES AND FEEDERS 2	460-1	(4)461-1	460-1	460-1	460-1	460-1	460-1
MISC. ASSEMBLIES AND FEEDERS 1			462-2		410-1	462-2	
JUMPERS			428-2			428-2	
HANGERS	210-200	210-200	210-200	210-200	210-200	210-200	210-200
SUPPORT REGISTRATION REFERENCE	400-1	401-1	400-1	401-1	416-1, 417-1, 417-2-42"	401-1	400-1
DOWN GUY ASSEMBLY		(2)449-1		449-1		449-1	
IN-SPAN ASSEMBLIES							
TERMINATION HEIGHT							
FOUNDATION REFERENCE							
POLE REFERENCE	525-40-8	525-40-8	525-40-8	525-40-8	525-40-8	525-40-8	525-40-8
STAGGER	▼ 6"	▲ 6"	▼ 6"	▲ 6"	▼ 6"	▲ 6"	▼ 6"
MESSENGER WIRE HEIGHT	24'-6"	24'-6"	24'-6"	24'-6"	24'-6"	24'-6"	24'-6"
TROLLEY WIRE HEIGHT	21'-0"	21'-0"	21'-0"	21'-0"	21'-0"	21'-0"	21'-0"
FACE OF POLE TO CENTERLINE TRACK	9'-0"	9'-0"	9'-0"	9'-0"	9'-0"	9'-0"	9'-0"
STATIONING	3477+22	3479+22	3481+22	3483+22	3485+22	3487+22	3489+22
STRUCTURE NO.	65-29	65-30	65-31	65-32	66-01	66-02	66-03

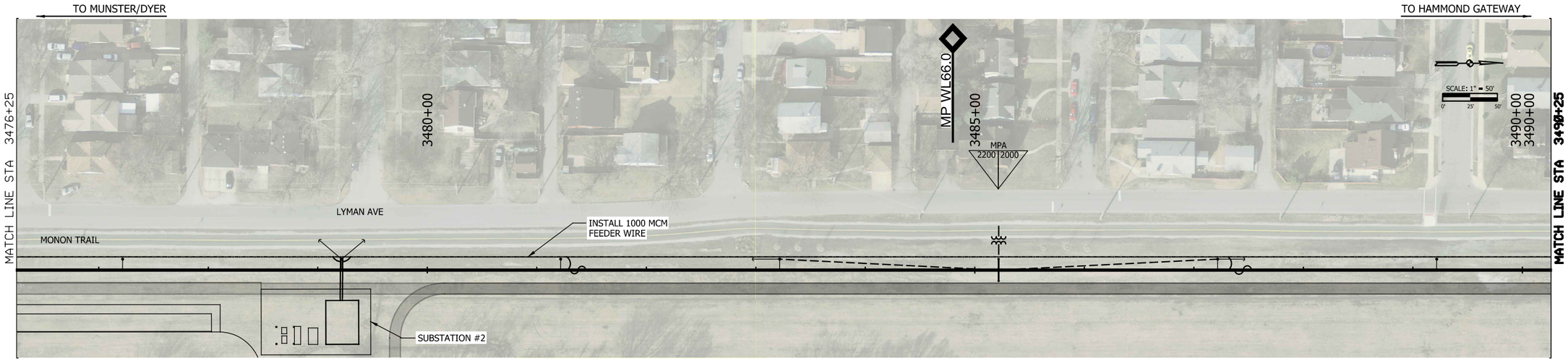

STRUCTURE NO.	66-01
STATIONING	3485+22
FACE OF POLE TO CENTERLINE TRACK	9'-0"
TROLLEY WIRE HEIGHT	
MESSENGER WIRE HEIGHT	
STAGGER	
POLE REFERENCE	525-40-8
FOUNDATION REFERENCE	
TERMINATION HEIGHT	
IN-SPAN ASSEMBLIES	
DOWN GUY ASSEMBLY	
SUPPORT REGISTRATION REFERENCE	
HANGERS	
JUMPERS	
MISC. ASSEMBLIES AND FEEDERS 1	
MISC. ASSEMBLIES AND FEEDERS 2	503-1
SIGNAL POWER ASSEMBLY	

OCS PLAN SHEET

NOTES

1. XXXX
2. XXXX
3. XXXX
4. XXXX

NOT FOR CONSTRUCTION

SERIES SYSPL-18 OF SYSPL-38

JKELLMA

7/19/2017 9:10:03 PM

PLOT DATE:

HDR Engineering, Inc.
8550 W Bryn Mawr Ave., Suite 900
Chicago, IL 60631

www.hdrinc.com

Burns
BURNSENGINEERING, INC. | 215 979-7700
TWO COMMERCE SQUARE, 2001 MARKET ST, SUITE 600
PHILADELPHIA, PA 19103

ISSUE	DATE	DESCRIPTION

NICTD
NORTHERN INDIANA COMMUTER TRANSPORTATION DISTRICT
33 East Highway 12
Chesterton, Indiana 46304

WEST LAKE CORRIDOR
DYER TO HAMMOND, INDIANA

DESIGNED: RSW
DRAWN: VJC
CHECKED: MP
DATE: 07/21/17

NICTD - WEST LAKE CORRIDOR - MP WL 61.38 TO WL 69.18
SINGLE TRACK

PLAN STA 3476+25 TO 3490+25
SYSTEM

FILENAME SHT_WL_OCS_PL_118.dgn
SCALE AS NOTED

SHEET 32 OF 248

SIGNAL POWER ASSEMBLY	456-3	456-3	456-3	456-3	456-6	456-3	456-3	456-3	456-3
MISC. ASSEMBLIES AND FEEDERS 2	460-1	460-1	460-1	460-1	460-2	460-1	460-1	460-1	460-1
MISC. ASSEMBLIES AND FEEDERS 1			462-2		441-1				462-2
JUMPERS			428-2						428-1
HANGERS	210-200	210-200	210-200	210-200	210-195, 213-205		(2)214-200		210-200, 213-210
SUPPORT REGISTRATION REFERENCE	401-1	400-1	401-1	400-1	401-1	400-1	406-1	406-1	401-1
DOWN GUY ASSEMBLY					449-1				
IN-SPAN ASSEMBLIES									
TERMINATION HEIGHT					26'-0"				
FOUNDATION REFERENCE					521-15				
POLE REFERENCE	525-40-8	525-40-8	525-40-8	525-40-8	500-35	525-40-8	525-40-8	525-40-8	525-40-8
STAGGER	▲ 6"	▼ 6"	▲ 6"	▼ 6"	▲ 6"	▼ 6"	▲ 6"	▼ 6"	▲ 6"
MESSENGER WIRE HEIGHT	24'-6"	24'-6"	24'-6"	24'-6"	24'-0"	24'-6"	25'-6"	24'-6"	25'-6"
TROLLEY WIRE HEIGHT	21'-0"	21'-0"	21'-0"	21'-0"	21'-0"	21'-0"	21'-11"	21'-11"	21'-0"
FACE OF POLE TO CENTERLINE TRACK	9'-0"	9'-0"	9'-0"	9'-0"	9'-0"	9'-0"	9'-0"	9'-0"	9'-0"
STATIONING	3491+22	3493+22	3495+22	3497+22	3499+22	3501+22	3501+32	3503+22	3503+32
STRUCTURE NO.	66-04	66-05	66-06	66-07	66-08	66-09	66-10	66-11	66-12

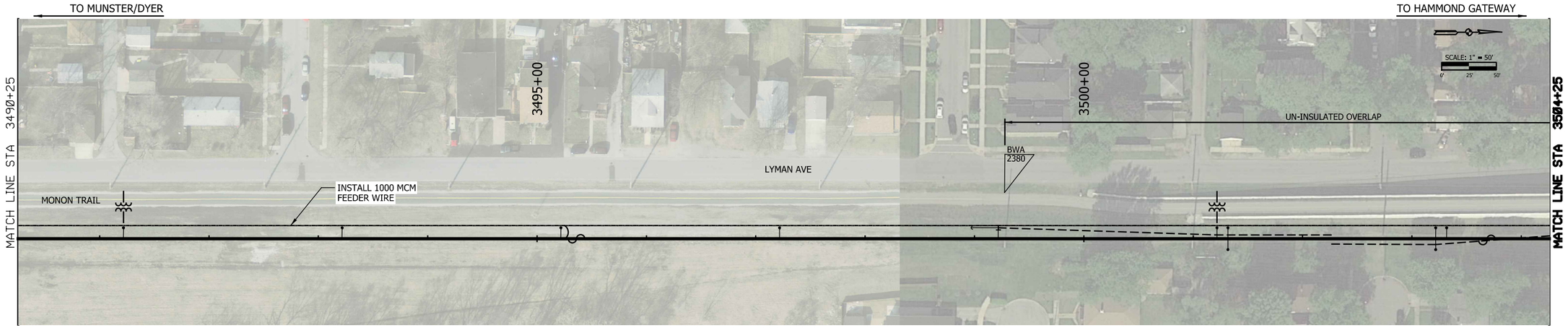

STRUCTURE NO.		66-10	66-11
STATIONING		3501+32	3503+22
FACE OF POLE TO CENTERLINE TRACK		9'-0"	9'-0"
TROLLEY WIRE HEIGHT			
MESSENGER WIRE HEIGHT			
STAGGER			
POLE REFERENCE		525-40-8	525-40-8
FOUNDATION REFERENCE			
TERMINATION HEIGHT			
IN-SPAN ASSEMBLIES			
DOWN GUY ASSEMBLY		449-2	449-2
SUPPORT REGISTRATION REFERENCE			
HANGERS			
JUMPERS			
MISC. ASSEMBLIES AND FEEDERS 1			
MISC. ASSEMBLIES AND FEEDERS 2			
SIGNAL POWER ASSEMBLY			

OCS PLAN SHEET

NOTES

1. XXXX
2. XXXX
3. XXXX
4. XXXX

NOT FOR CONSTRUCTION

SERIES SYSPL-19 OF SYSPL-38

JKELLMA

PLOT DATE: 7/19/2017 9:10:38 PM

HDR Engineering, Inc.
8550 W Bryn Mawr Ave., Suite 900
Chicago, IL 60631
www.hdrinc.com

Burns
BURNS ENGINEERING, INC. | 215 979-7700
TWO COMMERCE SQUARE, 2001 MARKET ST, SUITE 600
PHILADELPHIA, PA 19103

ISSUE	DATE	DESCRIPTION

NICTD
NORTHERN INDIANA COMMUTER TRANSPORTATION DISTRICT
33 East Highway 12
Chesterton, Indiana 46304

WEST LAKE CORRIDOR
DYER TO HAMMOND, INDIANA

DESIGNED: RSW
DRAWN: VJC
CHECKED: MP
DATE: 07/21/17

NICTD - WEST LAKE CORRIDOR - MP WL 61.38 TO WL 69.18
SINGLE TRACK

PLAN STA 3490+25 TO 3504+25
SYSTEM

FILENAME SHT_WL_OCS_PL_119.dgn
SCALE AS NOTED

SHEET 33 OF 248

SIGNAL POWER ASSEMBLY							
MISC. ASSEMBLIES AND FEEDERS 2	460-2	460-1	460-1	460-1	461-1	460-1	460-1
MISC. ASSEMBLIES AND FEEDERS 1	441-1			462-2			
JUMPERS				428-2			
HANGERS	210-200	210-200	210-200	210-200	210-200	210-200	210-180
SUPPORT REGISTRATION REFERENCE	400-1	401-1	400-1	401-1	400-1	401-1	400-1
DOWN GUY ASSEMBLY	449-1				(2) 449-1		
IN-SPAN ASSEMBLIES							
TERMINATION HEIGHT	26'-0"						
FOUNDATION REFERENCE	521-15						
POLE REFERENCE	500-35	525-40-8	525-40-8	525-40-8	525-40-8	525-40-8	525-40-8
STAGGER	▼ 6"	▲ 6"	▼ 6"	▲ 6"	▼ 6"	▲ 6"	▼ 6"
MESSENGER WIRE HEIGHT	24'-6"	24'-6"	24'-6"	24'-6"	24'-6"	24'-6"	24'-6"
TROLLEY WIRE HEIGHT	21'-0"	21'-0"	21'-0"	21'-0"	21'-0"	21'-0"	21'-0"
FACE OF POLE TO CENTERLINE TRACK	9'-0"	9'-0"	9'-0"	9'-0"	9'-0"	9'-0"	9'-0"
STATIONING	3505+22	3507+22	3509+22	3511+22	3513+22	3515+22	3517+22
STRUCTURE NO.	66-13	66-14	66-15	66-16	66-17	66-18	66-19

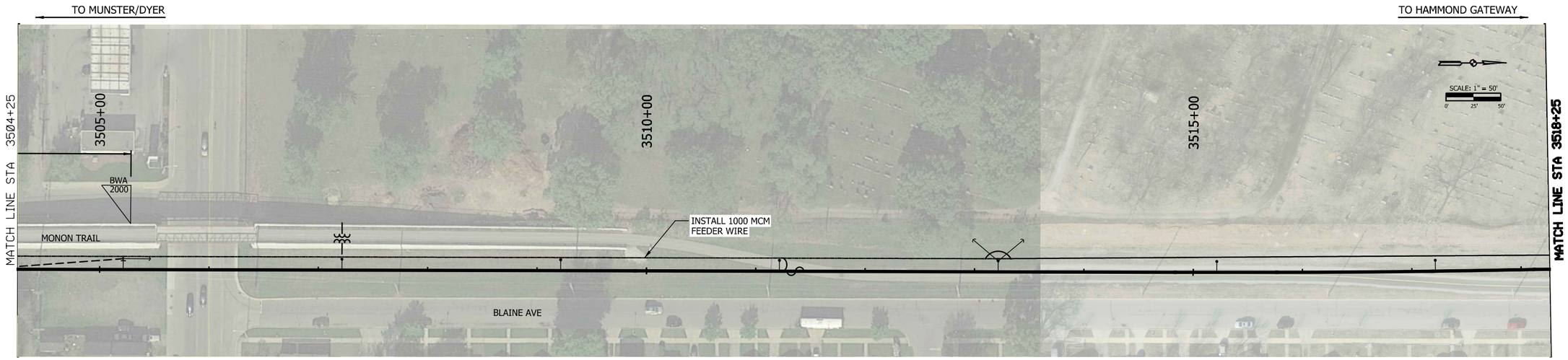

STRUCTURE NO.	
STATIONING	
FACE OF POLE TO CENTERLINE TRACK	
TROLLEY WIRE HEIGHT	
MESSENGER WIRE HEIGHT	
STAGGER	
POLE REFERENCE	
FOUNDATION REFERENCE	
TERMINATION HEIGHT	
IN-SPAN ASSEMBLIES	
DOWN GUY ASSEMBLY	
SUPPORT REGISTRATION REFERENCE	
HANGERS	
JUMPERS	
MISC. ASSEMBLIES AND FEEDERS 1	
MISC. ASSEMBLIES AND FEEDERS 2	
SIGNAL POWER ASSEMBLY	

OCS PLAN SHEET

NOTES

1. XXXX
2. XXXX
3. XXXX
4. XXXX

NOT FOR CONSTRUCTION

SERIES SYSPL-20 OF SYSPL-38

JKIELLMA

PLOT DATE: 7/19/2017 9:11:19 PM

HDR Engineering, Inc.
8550 W Bryn Mawr Ave., Suite 900
Chicago, IL 60631
www.hdrinc.com

Burns
BURNS ENGINEERING, INC. | 215 979-7700
TWO COMMERCE SQUARE, 2001 MARKET ST, SUITE 600
PHILADELPHIA, PA 19103

ISSUE	DATE	DESCRIPTION

NICTD
NORTHERN INDIANA COMMUTER TRANSPORTATION DISTRICT
33 East Highway 12
Chesterton, Indiana 46304

WEST LAKE CORRIDOR
DYER TO HAMMOND, INDIANA

DESIGNED: RSW
DRAWN: VJC
CHECKED: MP
DATE: 07/21/17

NICTD - WEST LAKE CORRIDOR - MP WL 61.38 TO WL 69.18
SINGLE TRACK

PLAN STA 3504+25 TO 3518+25 SYSTEM

FILENAME SHT_WL_OCS_PL_120.dgn
SCALE AS NOTED

SHEET 34 OF 248

SIGNAL POWER ASSEMBLY							
MISC. ASSEMBLIES AND FEEDERS 2	460-1	460-1	460-1	460-1	460-1	460-1	460-1
MISC. ASSEMBLIES AND FEEDERS 1	462-2		410-1		462-2		
JUMPERS	428-2				428-2		
HANGERS	210-200	210-200	210-200	210-200	210-200	210-200	210-200
SUPPORT REGISTRATION REFERENCE	401-1	400-1	416-1, 417-1, 417-2-42"	400-1	401-1	400-1	401-1
DOWN GUY ASSEMBLY		449-1		449-1			
IN-SPAN ASSEMBLIES							
TERMINATION HEIGHT							
FOUNDATION REFERENCE							
POLE REFERENCE	525-40-8	525-40-8	525-40-8	525-40-8	525-40-8	525-40-8	525-40-8
STAGGER	▲ 6"	▼ 6"	▲ 6"	▼ 6"	▲ 6"	▼ 6"	▲ 6"
MESSENGER WIRE HEIGHT	24'-6"	24'-6"	24'-0"	24'-0"	24'-6"	24'-6"	24'-6"
TROLLEY WIRE HEIGHT	21'-0"	21'-0"	21'-0"	21'-0"	21'-0"	21'-0"	21'-0"
FACE OF POLE TO CENTERLINE TRACK	9'-0"	9'-0"	9'-0"	9'-0"	9'-0"	9'-0"	9'-0"
STATIONING	3519+02	3521+02	3523+02	3524+62	3526+62	3528+62	3530+62
STRUCTURE NO.	66-20	66-21	66-22	66-23	66-24	66-25	66-26

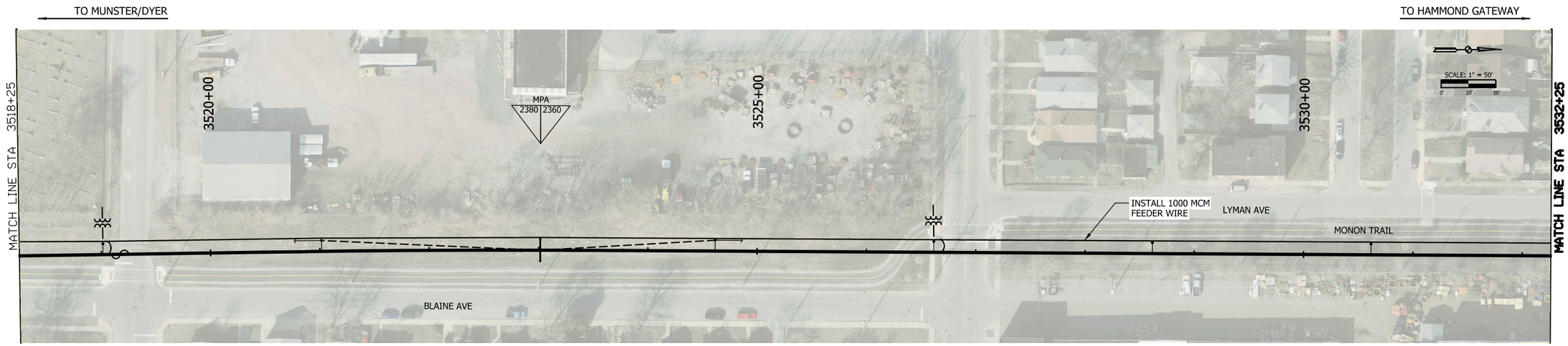

STRUCTURE NO.	66-22
STATIONING	3523+02
FACE OF POLE TO CENTERLINE TRACK	9'-0"
TROLLEY WIRE HEIGHT	
MESSENGER WIRE HEIGHT	
STAGGER	
POLE REFERENCE	525-40-8
FOUNDATION REFERENCE	
TERMINATION HEIGHT	
IN-SPAN ASSEMBLIES	
DOWN GUY ASSEMBLY	
SUPPORT REGISTRATION REFERENCE	
HANGERS	
JUMPERS	
MISC. ASSEMBLIES AND FEEDERS 1	
MISC. ASSEMBLIES AND FEEDERS 2	503-1
SIGNAL POWER ASSEMBLY	

OCS PLAN SHEET

NOTES

1. XXXX
2. XXXX
3. XXXX
4. XXXX

NOT FOR CONSTRUCTION

SERIES SYSPL-21 OF SYSPL-38

JKOELLMA

PLOT DATE: 7/19/2017 9:12:05 PM

HDR Engineering, Inc.
8550 W Bryn Mawr Ave., Suite 900
Chicago, IL 60631
www.hdrinc.com

Burns
BURNS ENGINEERING, INC. | 215 979-7700
TWO COMMERCE SQUARE, 2001 MARKET ST, SUITE 600
PHILADELPHIA, PA 19103

ISSUE	DATE	DESCRIPTION

NICTD
NORTHERN INDIANA COMMUTER TRANSPORTATION DISTRICT
33 East Highway 12
Chesterton, Indiana 46304

WEST LAKE CORRIDOR
DYER TO HAMMOND, INDIANA

DESIGNED: RSW
DRAWN: VJC
CHECKED: MP
DATE: 07/21/17

NICTD - WEST LAKE CORRIDOR - MP WL 61.38 TO WL 69.18
SINGLE TRACK

PLAN STA 3518+25 TO 3532+25 SYSTEM

FILENAME SHT_WL_OCS_PL_121.dgn
SCALE AS NOTED

SHEET 35 OF 248

SIGNAL POWER ASSEMBLY									
MISC. ASSEMBLIES AND FEEDERS 2	460-1	460-1	460-1	460-1	460-2	460-1	460-1	460-1	460-1
MISC. ASSEMBLIES AND FEEDERS 1		462-2			441-1				462-2
JUMPERS		428-2							428-1
HANGERS	210-200		210-200	210-200	210-200	210-xx, 213-xx	(2)214-200		210-xx, 213-xx
SUPPORT REGISTRATION REFERENCE	400-1	401-1	400-1	401-1	400-1	401-1	406-1	406-1	400-1
DOWN GUY ASSEMBLY					449-1				
IN-SPAN ASSEMBLIES									
TERMINATION HEIGHT					26'-0"				
FOUNDATION REFERENCE					521-15				
POLE REFERENCE	525-40-8	525-40-8	525-40-8	525-40-8	500-35	525-40-8	525-40-8	525-40-8	525-40-8
STAGGER	▼ 6"	▲ 6"	▼ 6"	▲ 6"	▼ 6"	▲ 6"	▼ 6"	▲ 6"	▼ 6"
MESSENGER WIRE HEIGHT	24'-6"	24'-6"	24'-6"	24'-6"	24'-6"	24'-6"	25'-6"	24'-6"	25'-6"
TROLLEY WIRE HEIGHT	21'-0"	21'-0"	21'-0"	21'-0"	21'-0"	21'-0"	21'-11"	21'-11"	21'-0"
FACE OF POLE TO CENTERLINE TRACK	9'-0"	9'-0"	9'-0"	9'-0"	9'-0"	9'-0"	9'-0"	9'-0"	9'-0"
STATIONING	3532+62	3534+62	3536+62	3538+62	3540+62	3542+62	6542+72	3544+62	3544+72
STRUCTURE NO.	66-27	66-28	66-29	67-01	67-02	67-03	67-04	67-05	67-06

TO MUNSTER/DYER

TO HAMMOND GATEWAY

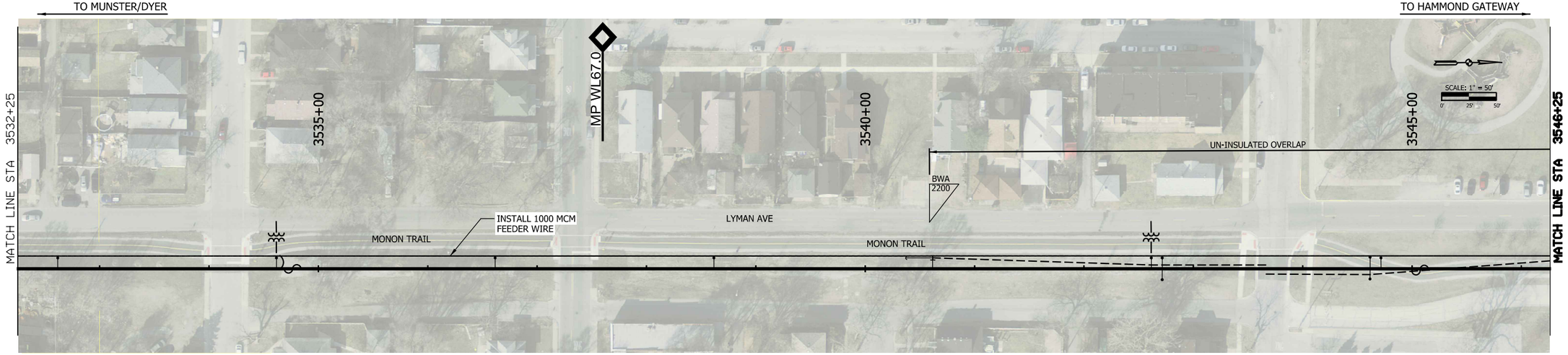

STRUCTURE NO.		67-04	67-05
STATIONING		6542+72	6544+62
FACE OF POLE TO CENTERLINE TRACK		9'-0"	9'-0"
TROLLEY WIRE HEIGHT			
MESSENGER WIRE HEIGHT			
STAGGER			
POLE REFERENCE		525-40-8	525-40-8
FOUNDATION REFERENCE			
TERMINATION HEIGHT			
IN-SPAN ASSEMBLIES			
DOWN GUY ASSEMBLY		449-2	449-2
SUPPORT REGISTRATION REFERENCE			
HANGERS			
JUMPERS			
MISC. ASSEMBLIES AND FEEDERS 1			
MISC. ASSEMBLIES AND FEEDERS 2			
SIGNAL POWER ASSEMBLY			

OCS PLAN SHEET

NOTES

1. XXXX
2. XXXX
3. XXXX
4. XXXX

NOT FOR CONSTRUCTION

SERIES SYSPL-22 OF SYSPL-38

JKIELLMA

PLOT DATE: 7/19/2017 9:12:50 PM

HDR Engineering, Inc.
8550 W Bryn Mawr Ave., Suite 900
Chicago, IL 60631
www.hdrinc.com

Burns
BURNS ENGINEERING, INC. | 215 979-7700
TWO COMMERCE SQUARE, 2001 MARKET ST, SUITE 600
PHILADELPHIA, PA 19103

ISSUE	DATE	DESCRIPTION

NICTD
NORTHERN INDIANA COMMUTER TRANSPORTATION DISTRICT
33 East Highway 12
Chesterton, Indiana 46304

WEST LAKE CORRIDOR
DYER TO HAMMOND, INDIANA

DESIGNED: RSW
DRAWN: VJC
CHECKED: MP
DATE: 07/21/17

NICTD - WEST LAKE CORRIDOR - MP WL 61.38 TO WL 69.18
SINGLE TRACK

PLAN STA 3532+25 TO 3546+25 SYSTEM

FILENAME SHT_WL_OCS_PL_122.dgn
SCALE AS NOTED

SHEET 36 OF 248

SIGNAL POWER ASSEMBLY							
MISC. ASSEMBLIES AND FEEDERS 2	460-1	460-1	460-1	460-1	460-1	460-1	461-1
MISC. ASSEMBLIES AND FEEDERS 1	441-1				462-2		
JUMPERS					428-2		
HANGERS	210-195	210-200	210-200	210-200	210-200	210-200	210-200
SUPPORT REGISTRATION REFERENCE	401-1	400-1	401-1	400-1	401-1	400-1	401-1
DOWN GUY ASSEMBLY	449-1						(2) 449-1
IN-SPAN ASSEMBLIES							
TERMINATION HEIGHT	26'-0"						
FOUNDATION REFERENCE	521-15						
POLE REFERENCE	500-35	525-40-8	525-40-8	525-40-8	525-40-8	525-40-8	525-40-8
STAGGER	▲ 6"	▼ 6"	▲ 6"	▼ 6"	▲ 6"	▼ 6"	▲ 6"
MESSENGER WIRE HEIGHT	24'-6"	24'-6"	24'-6"	24'-6"	24'-6"	24'-6"	24'-6"
TROLLEY WIRE HEIGHT	21'-0"	21'-0"	21'-0"	21'-0"	21'-0"	21'-0"	21'-0"
FACE OF POLE TO CENTERLINE TRACK	9'-0"	9'-0"	9'-0"	9'-0"	9'-0"	9'-0"	9'-0"
STATIONING	3546+67	3548+62	3550+62	3552+62	3554+62	3556+62	3558+62
STRUCTURE NO.	67-07	67-08	67-09	67-10	67-11	67-12	67-13

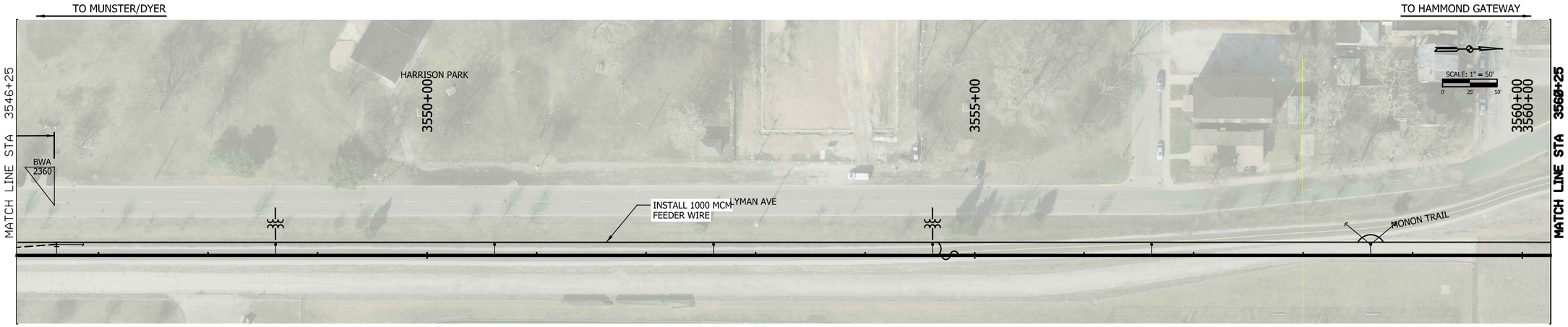

STRUCTURE NO.	
STATIONING	
FACE OF POLE TO CENTERLINE TRACK	
TROLLEY WIRE HEIGHT	
MESSENGER WIRE HEIGHT	
STAGGER	
POLE REFERENCE	
FOUNDATION REFERENCE	
TERMINATION HEIGHT	
IN-SPAN ASSEMBLIES	
DOWN GUY ASSEMBLY	
SUPPORT REGISTRATION REFERENCE	
HANGERS	
JUMPERS	
MISC. ASSEMBLIES AND FEEDERS 1	
MISC. ASSEMBLIES AND FEEDERS 2	
SIGNAL POWER ASSEMBLY	

OCS PLAN SHEET

NOTES

1. XXXX
2. XXXX
3. XXXX
4. XXXX

NOT FOR CONSTRUCTION

SERIES SYSPL-23 OF SYSPL-38

JKIELMA

PLOT DATE: 7/19/2017 9:13:36 PM

HDR Engineering, Inc.
8550 W Bryn Mawr Ave., Suite 900
Chicago, IL 60631
www.hdrinc.com

Burns
BURNS ENGINEERING, INC. | 215 979-7700
TWO COMMERCE SQUARE, 2001 MARKET ST, SUITE 600
PHILADELPHIA, PA 19103

ISSUE	DATE	DESCRIPTION

NICTD
NORTHERN INDIANA COMMUTER TRANSPORTATION DISTRICT
33 East Highway 12
Chesterton, Indiana 46304

WEST LAKE CORRIDOR
DYER TO HAMMOND, INDIANA

DESIGNED: RSW
DRAWN: VJC
CHECKED: MP
DATE: 07/21/17

NICTD - WEST LAKE CORRIDOR - MP WL 61.38 TO WL 69.18
SINGLE TRACK

PLAN STA 3546+25 TO 3560+25
SYSTEM

FILENAME SHT_WL_OCS_PL_123.dgn
SCALE AS NOTED

SHEET 37 OF 248

SIGNAL POWER ASSEMBLY								
MISC. ASSEMBLIES AND FEEDERS 2	460-1	460-1	460-1	460-1	460-1	460-1	460-1	460-1
MISC. ASSEMBLIES AND FEEDERS 1			462-2					462-2
JUMPERS			428-2					428-2
HANGERS	210-200	210-200	210-172	210-173	210-173	210-173	210-173	210-173
SUPPORT REGISTRATION REFERENCE	400-1	416-1, 417-1, 417-2-42"	400-1	400-1	400-1	400-1	400-1	400-1
DOWN GUY ASSEMBLY	449-1		449-1					
IN-SPAN ASSEMBLIES								
TERMINATION HEIGHT								
FOUNDATION REFERENCE								
POLE REFERENCE	525-40-8	525-40-8	525-40-8	525-40-8	525-40-8	525-40-8	525-40-8	525-40-8
STAGGER	▼ 6"	0"	▼ 8"	▼ 8"	▼ 8"	▼ 8"	▼ 8"	▼ 8"
MESSENGER WIRE HEIGHT	24'-6"	24'-6"	24'-0"	24'-0"	24'-0"	24'-0"	24'-0"	24'-0"
TROLLEY WIRE HEIGHT	21'-0"	21'-0"	21'-0"	21'-0"	21'-0"	21'-0"	21'-0"	21'-0"
FACE OF POLE TO CENTERLINE TRACK	9'-0"	9'-0"	9'-0"	9'-0"	9'-0"	9'-0"	9'-0"	9'-0"
STATIONING	3560+62	3562+62	3564+62	3566+34	3568+07	3569+80	3571+53	3573+26
STRUCTURE NO.	67-14	67-15	67-16	67-17	67-18	67-19	67-20	67-21

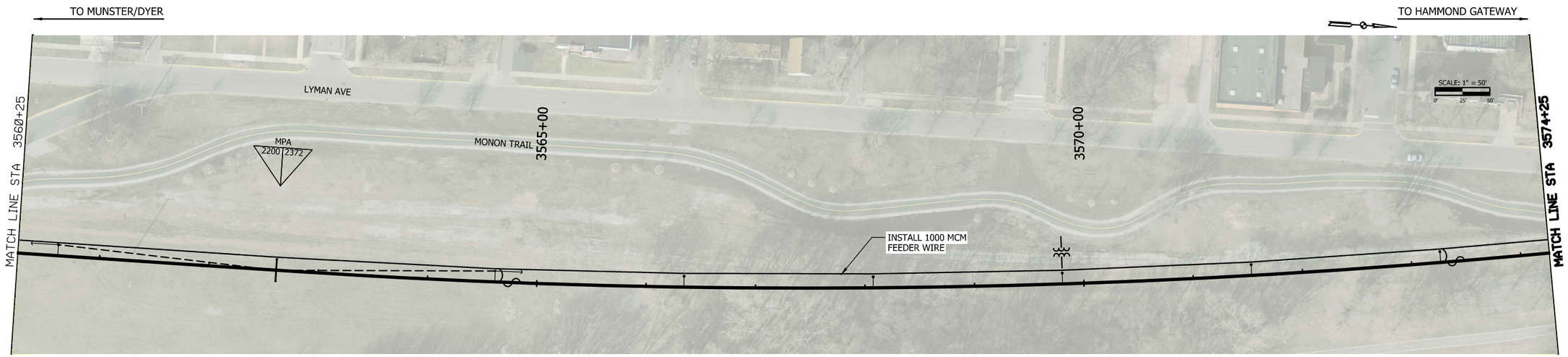

STRUCTURE NO.	67-15
STATIONING	3562+62
FACE OF POLE TO CENTERLINE TRACK	9'-0"
TROLLEY WIRE HEIGHT	
MESSENGER WIRE HEIGHT	
STAGGER	
POLE REFERENCE	525-40-8
FOUNDATION REFERENCE	
TERMINATION HEIGHT	
IN-SPAN ASSEMBLIES	
DOWN GUY ASSEMBLY	
SUPPORT REGISTRATION REFERENCE	
HANGERS	
JUMPERS	
MISC. ASSEMBLIES AND FEEDERS 1	
MISC. ASSEMBLIES AND FEEDERS 2	503-1
SIGNAL POWER ASSEMBLY	

OCS PLAN SHEET

NOTES

1. XXXX
2. XXXX
3. XXXX
4. XXXX

NOT FOR CONSTRUCTION

SERIES SYSPL-24 OF SYSPL-38

JKIELLMA

7/19/2017 9:14:14 PM

PLOT DATE:

HDR Engineering, Inc.
8550 W Bryn Mawr Ave., Suite 900
Chicago, IL 60631

www.hdrinc.com

Burns
BURNSENGINEERING, INC. | 215 979-7700
TWO COMMERCE SQUARE, 2001 MARKET ST, SUITE 600
PHILADELPHIA, PA 19103

ISSUE	DATE	DESCRIPTION

NICTD
NORTHERN INDIANA COMMUTER TRANSPORTATION DISTRICT
33 East Highway 12
Chesterton, Indiana 46304

WEST LAKE CORRIDOR
DYER TO HAMMOND, INDIANA

DESIGNED: RSW
DRAWN: VJC
CHECKED: MP
DATE: 07/21/17

NICTD - WEST LAKE CORRIDOR - MP WL 61.38 TO WL 69.18
SINGLE TRACK

PLAN STA 3560+25 TO 3574+25
SYSTEM

FILENAME SHT_WL_OCS_PL_124.dgn
SCALE AS NOTED

SHEET 38 OF 248

SIGNAL POWER ASSEMBLY																	
MISC. ASSEMBLIES AND FEEDERS 2	460-1		460-1		460-1			460-2		460-2				460-2		460-2	
MISC. ASSEMBLIES AND FEEDERS 1								441-1						462-2		441-1	
JUMPERS														428-1			
HANGERS		210-174		210-180		210-181			210-200, 213-210			(2)214-200			210-190, 213-200		210-200
SUPPORT REGISTRATION REFERENCE	401-1		401-1		400-1			401-1		400-1	406-1		406-1	401-1		400-1	
DOWN GUY ASSEMBLY								449-1								449-1	
IN-SPAN ASSEMBLIES																	
TERMINATION HEIGHT								26'-0"								26'-0"	
FOUNDATION REFERENCE							523-DGA	521-15		523-xx	523-xx		523-xx	523-xx		521-15	523-DGA
POLE REFERENCE	525-40-8		525-40-8		525-40-8			500-35		501-3-30	501-3-30		501-3-30	501-3-30		500-35	
STAGGER	0"		▲ 6"		▼ 6"			▲ 6"		▼ 6"	▲ 6"		▼ 6"	▲ 6"		▼ 6"	
MESSENGER WIRE HEIGHT	24'-0"		24'-0"		24'-0"			24'-0"		24'-0"	25'-0"		24'-0"	25'-0"		24'-0"	
TROLLEY WIRE HEIGHT	21'-0"		21'-0"		21'-0"			21'-0"		21'-0"	21'-11"		21'-11"	21'-0"		21'-0"	
FACE OF POLE TO CENTERLINE TRACK	9'-0"		9'-0"		9'-0"			9'-0"		9'-0"	9'-0"		9'-0"	9'-0"		9'-0"	
STATIONING	3574+99		3576+73		3578+53			3580+34		3582+34	3582+44		3584+34	3584+44		3586+30	
STRUCTURE NO.	67-22		67-23		67-24			67-25		67-26	67-27		67-28	67-29		67-30	

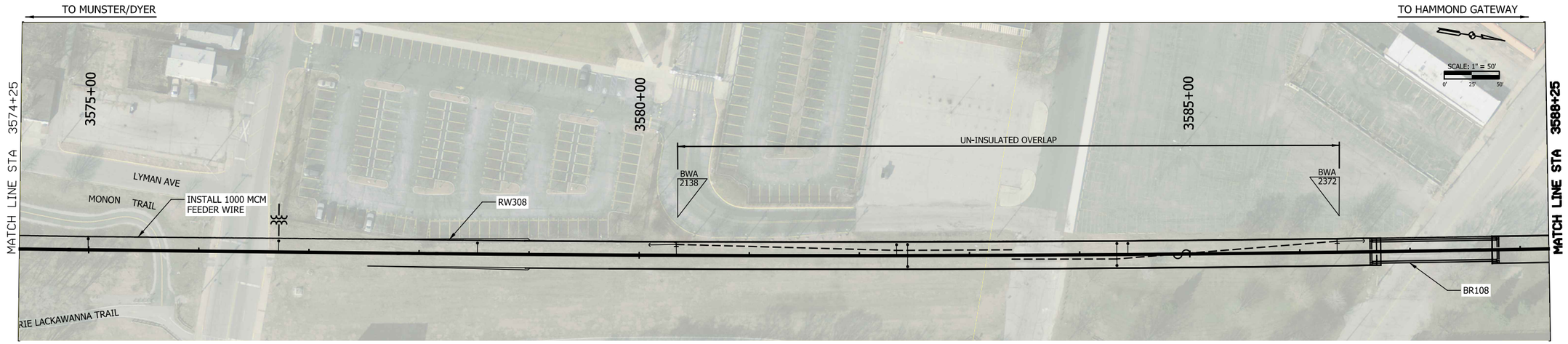

STRUCTURE NO.		67-27	67-28
STATIONING		3582+44	3584+34
FACE OF POLE TO CENTERLINE TRACK		9'-0"	9'-0"
TROLLEY WIRE HEIGHT			
MESSENGER WIRE HEIGHT			
STAGGER			
POLE REFERENCE		501-3-30	501-3-30
FOUNDATION REFERENCE		523-xx	523-xx
TERMINATION HEIGHT			
IN-SPAN ASSEMBLIES			
DOWN GUY ASSEMBLY		449-2	449-2
SUPPORT REGISTRATION REFERENCE			
HANGERS			
JUMPERS			
MISC. ASSEMBLIES AND FEEDERS 1			
MISC. ASSEMBLIES AND FEEDERS 2			
SIGNAL POWER ASSEMBLY			

OCS PLAN SHEET

NOTES

1. ALL STATION LOCATIONS FOR CATENARY POLES AND ASSOCIATED DEVICES LOCATED ON A PIER OR MOUNTED SUPERSTRUCTURE ARE APPROXIMATE. SEE THE STRUCTURAL PLANS FOR EXACT LOCATION AND LAYOUT.

NOT FOR CONSTRUCTION

SERIES SYSPL-25 OF SYSPL-38

JKELLMA

PLOT DATE: 7/19/2017 9:14:59 PM

HDR Engineering, Inc.
8550 W Bryn Mawr Ave., Suite 900
Chicago, IL 60631
www.hdrinc.com

Burns
BURNSENGINEERING, INC. | 215 979-7700
TWO COMMERCE SQUARE, 2001 MARKET ST, SUITE 600
PHILADELPHIA, PA 19103

ISSUE	DATE	DESCRIPTION

NICTD
NORTHERN INDIANA COMMUTER TRANSPORTATION DISTRICT
33 East Highway 12
Chesterton, Indiana 46304

WEST LAKE CORRIDOR
DYER TO HAMMOND, INDIANA

DESIGNED: RSW
DRAWN: VJC
CHECKED: MP
DATE: 07/21/17

NICTD - WEST LAKE CORRIDOR - MP WL 61.38 TO WL 69.18
SINGLE TRACK

PLAN STA 3574+25 TO 3588+25
SYSTEM

FILENAME SHT_WL_OCS_PL_125.dgn
SCALE AS NOTED

SHEET 39 OF 248

SIGNAL POWER ASSEMBLY													
MISC. ASSEMBLIES AND FEEDERS 2	460-2	460-2	460-2	460-2	460-2	460-2	460-2	460-2	460-2	460-2	461-2, 503-x, 508-x		503-x
MISC. ASSEMBLIES AND FEEDERS 1					462-2								
JUMPERS					428-2								
HANGERS	210-200	210-128	210-86	210-100	210-86	210-78	210-100	210-101	210-166	210-93			
SUPPORT REGISTRATION REFERENCE	401-1	400-1	401-1	401-1	401-1	401-1	401-1	401-1	401-1	401-1	416-1, 417-1, 417-2-42"		
DOWN GUY ASSEMBLY											449-1		
IN-SPAN ASSEMBLIES													
TERMINATION HEIGHT													
FOUNDATION REFERENCE	523-xx	523-xx	522-xx	522-xx	522-xx	522-xx	522-xx	522-xx	522-xx	522-xx	522-xx	522-DGA	522-xx
POLE REFERENCE	501-3-30	501-3-30	501-3-30	501-3-30	501-3-30	501-3-30	501-3-30	501-3-30	501-3-30	501-3-30	501-3-30		501-3-30
STAGGER	▲ 6"	▲ 8"	▲ 8"	▲ 6"	▲ 6"	▲ 6"	▲ 6"	▲ 6"	▲ 6"	0"	▼ 3"		
MESSENGER WIRE HEIGHT	24'-0"	24'-0"	24'-0"	24'-0"	24'-0"	24'-0"	24'-0"	24'-0"	24'-0"	24'-0"	24'-0"		
TROLLEY WIRE HEIGHT	21'-0"	21'-0"	21'-0"	21'-0"	21'-0"	21'-0"	21'-0"	21'-0"	21'-0"	21'-0"	21'-0"		
FACE OF POLE TO CENTERLINE TRACK	9'-0"	9'-0"	9'-0"	9'-0"	9'-0"	9'-0"	9'-0"	9'-0"	9'-0"	9'-0"	9'-0"		9'-0"
STATIONING	3588+34	3590+34	3591+62	3592+48	3593+48	3594+34	3595+12	3596+12	3597+13	3598+79	3599+72	3600+22	3601+72
STRUCTURE NO.	67-31	67-32	68-01	68-02	68-03	68-04	68-05	68-06	68-07	68-08	68-09		68-11

TO MUNSTER/DYER

TO HAMMOND GATEWAY

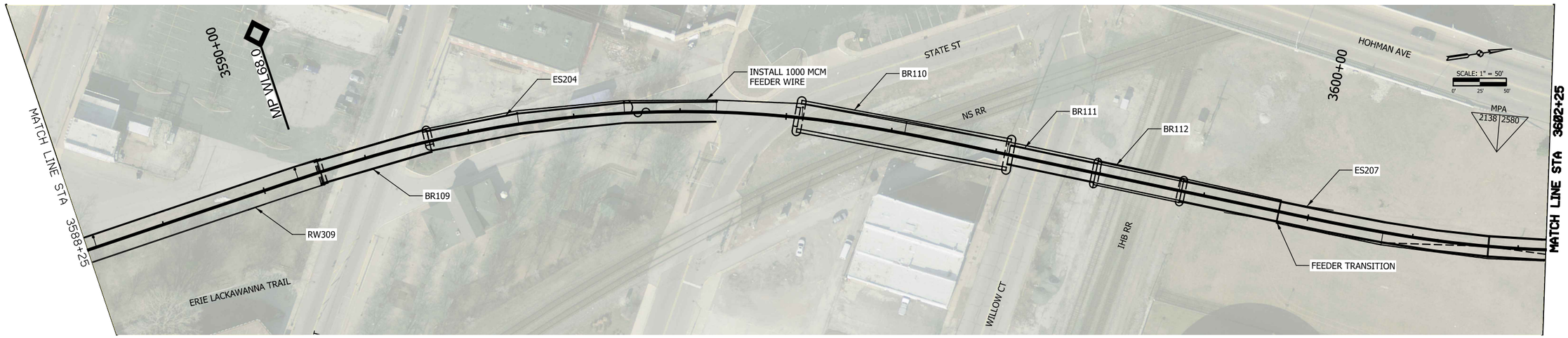

STRUCTURE NO.											68-09	68-10	68-11
STATIONING										3599+22	3599+72	3600+22 3600+72	3601+72
FACE OF POLE TO CENTERLINE TRACK											9'-0"	9'-0"	9'-0"
TROLLEY WIRE HEIGHT												21'-0"	21'-0"
MESSENGER WIRE HEIGHT												24'-0"	24'-0"
STAGGER												▼ 6"	▼ 6"
POLE REFERENCE											501-3-30	501-3-30	501-3-30
FOUNDATION REFERENCE										522-DGA	522-xx	522-DGA 522-xx	522-xx
TERMINATION HEIGHT													
IN-SPAN ASSEMBLIES													
DOWN GUY ASSEMBLY											449-1	449-1	
SUPPORT REGISTRATION REFERENCE												401-1	416-1, 417-1, 417-2-42"
HANGERS											210-100	210-100	210-100
JUMPERS													
MISC. ASSEMBLIES AND FEEDERS 1											508-x		410-1
MISC. ASSEMBLIES AND FEEDERS 2											461-2, 429-1	460-2	460-2
SIGNAL POWER ASSEMBLY											456-6	456-6	456-6

OCS PLAN SHEET

NOTES

1. ALL STATION LOCATIONS FOR CATENARY POLES AND ASSOCIATED DEVICES LOCATED ON A PIER OR MOUNTED SUPERSTRUCTURE ARE APPROXIMATE. SEE THE STRUCTURAL PLANS FOR EXACT LOCATION AND LAYOUT.

NOT FOR CONSTRUCTION

SERIES SYSPL-26 OF SYSPL-38

JKIELLMA

PLOT DATE: 7/19/2017 9:15:39 PM

HDR Engineering, Inc.
8550 W Bryn Mawr Ave., Suite 900
Chicago, IL 60631
www.hdrinc.com

Burns
BURNS ENGINEERING, INC. | 215 979-7700
TWO COMMERCE SQUARE, 2001 MARKET ST, SUITE 600
PHILADELPHIA, PA 19103

ISSUE	DATE	DESCRIPTION

NICTD
NORTHERN INDIANA COMMUTER TRANSPORTATION DISTRICT
33 East Highway 12
Chesterton, Indiana 46304

WEST LAKE CORRIDOR
DYER TO HAMMOND, INDIANA

DESIGNED: RSW
DRAWN: VJC
CHECKED: MP
DATE: 07/21/17

NICTD - WEST LAKE CORRIDOR - MP WL 61.38 TO WL 69.18
SINGLE TRACK

PLAN STA 3588+25 TO 3602+25 SYSTEM

FILENAME SHT_WL_OCS_PL_126.dgn
SCALE AS NOTED

SHEET 40 OF 248

SIGNAL POWER ASSEMBLY	
MISC. ASSEMBLIES AND FEEDERS 2	
MISC. ASSEMBLIES AND FEEDERS 1	503-X
JUMPERS	
HANGERS	
SUPPORT REGISTRATION REFERENCE	
DOWN GUY ASSEMBLY	
IN-SPAN ASSEMBLIES	416-6, 417-2-42"
TERMINATION HEIGHT	
FOUNDATION REFERENCE	523-xx
POLE REFERENCE	501-3-30
STAGGER	
MESSENGER WIRE HEIGHT	
TROLLEY WIRE HEIGHT	
FACE OF POLE TO CENTERLINE TRACK	9'-0"
STATIONING	3615+22
STRUCTURE NO.	68-20

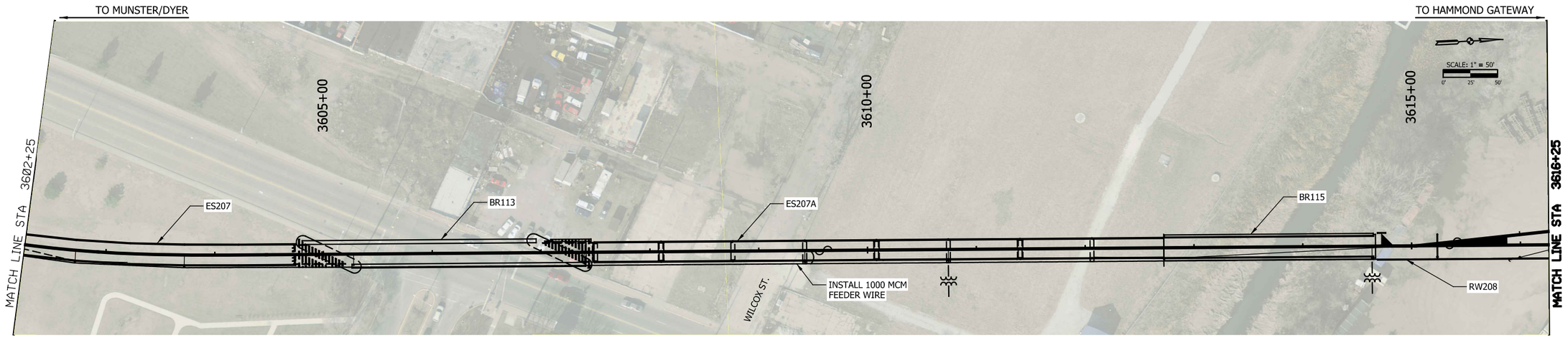

STRUCTURE NO.	68-12		68-13		68-14		68-15		68-16		68-17		68-18		68-19		68-20		68-21
STATIONING	3602+72		3603+72		3605+28		3607+40		3609+43		3610+75		3612+07 3612+73		3614+64		3615+22		3615+99
FACE OF POLE TO CENTERLINE TRACK	9'-0"		9'-0"		9'-0"		9'-0"		9'-0"		9'-0"		9'-0"		9'-0"		9'-0"		9'-0"
TROLLEY WIRE HEIGHT	21'-0"		21'-0"		21'-0"		21'-0"		21'-0"		21'-0"		21'-0"		21'-0"		21'-0"		
MESSENGER WIRE HEIGHT	24'-0"		24'-0"		24'-6"		24'-6"		24'-0"		24'-0"		24'-0"		24'-0"		24'-0"		
STAGGER	▼ 6"		▼ 6"		▲ 6"		▼ 6"		▲ 6"		▼ 6"		▲ 6"		▼ 3"		0"		
POLE REFERENCE	501-3-30		501-3-30		501-3-30		501-3-30		501-3-30		501-3-30		501-3-30		501-3-30		501-3-30		501-3-30
FOUNDATION REFERENCE	523-xx	523-DGA	523-xx		522-xx		522-xx		522-xx		522-xx		522-DGA 522-xx		522-xx		523-xx	523-DGA	523-xx
TERMINATION HEIGHT																			X'-X"
IN-SPAN ASSEMBLIES																			
DOWN GUY ASSEMBLY	449-1												449-1						449-1
SUPPORT REGISTRATION REFERENCE	401-1		401-1		400-1		401-1		400-1		401-1		400-1		(2)401-1		416-6, 417-1, 417-2-42"		400-1
HANGERS		210-100		210-156		210-212		210-203		210-132		210-198		210-191		210-58		210-77	
JUMPERS									428-2							428-1			
MISC. ASSEMBLIES AND FEEDERS 1									462-2						SPREADER BRKT		462-2		440-1, 440-2
MISC. ASSEMBLIES AND FEEDERS 2	460-2		460-2		460-2		460-2		460-2		460-2		460-2		460-2		460-2		460-2
SIGNAL POWER ASSEMBLY																			

OCS PLAN SHEET

NOTES

1. ALL STATION LOCATIONS FOR CATENARY POLES AND ASSOCIATED DEVICES LOCATED ON A PIER OR MOUNTED SUPERSTRUCTURE ARE APPROXIMATE. SEE THE STRUCTURAL PLANS FOR EXACT LOCATION AND LAYOUT.

NOT FOR CONSTRUCTION

SERIES SYSPL-27 OF SYSPL-38

JKJELLMA

PLOT DATE: 7/19/2017 9:16:22 PM

HDR Engineering, Inc.
8550 W Bryn Mawr Ave., Suite 900
Chicago, IL 60631
www.hdrinc.com

Burns
BURNS ENGINEERING, INC. | 215 979-7700
TWO COMMERCE SQUARE, 2001 MARKET ST, SUITE 600
PHILADELPHIA, PA 19103

ISSUE	DATE	DESCRIPTION

NICTD
NORTHERN INDIANA COMMUTER TRANSPORTATION DISTRICT
33 East Highway 12
Chesterton, Indiana 46304

WEST LAKE CORRIDOR
DYER TO HAMMOND, INDIANA

DESIGNED: RSW
DRAWN: VJC
CHECKED: MP
DATE: 07/21/17

NICTD - WEST LAKE CORRIDOR - MP WL 61.38 TO WL 69.18
SINGLE TRACK

PLAN STA 3602+25 TO 3616+25 SYSTEM

FILENAME SHT_WL_OCS_PL_127.dgn
SCALE AS NOTED
SHEET 41 OF 248

SIGNAL POWER ASSEMBLY		
MISC. ASSEMBLIES AND FEEDERS 2		
MISC. ASSEMBLIES AND FEEDERS 1		
JUMPERS		
HANGERS		
SUPPORT REGISTRATION REFERENCE		
DOWN GUY ASSEMBLY	449-2	449-2
IN-SPAN ASSEMBLIES		
TERMINATION HEIGHT		
FOUNDATION REFERENCE	523-xx	523-xx
POLE REFERENCE	501-3-30	501-3-30
STAGGER		
MESSENGER WIRE HEIGHT		
TROLLEY WIRE HEIGHT		
FACE OF POLE TO CENTERLINE TRACK	9'-0"	9'-0"
STATIONING	3624+56	3625+96
STRUCTURE NO.	68-28	68-29

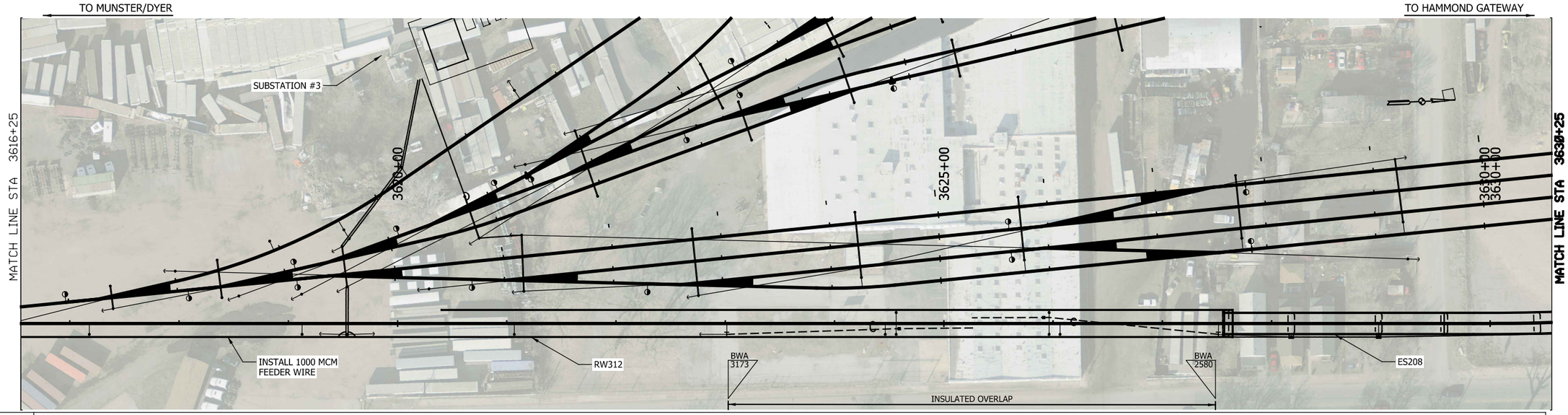

STRUCTURE NO.	68-22		68-23	68-24	68-25		68-26		68-27	68-28	68-29	68-30	68-31		68-32	
STATIONING	3617+18		3619+13	3619+54	3621+07	3622+81	3623+01		3624+46	3624+56	3625+96	3626+06	3627+51	3628+17	3628+98	
FACE OF POLE TO CENTERLINE TRACK	9'-0"		9'-0"	9'-0"	9'-0"		9'-0"		9'-0"	9'-0"	9'-0"	9'-0"	9'-0"		9'-0"	
TROLLEY WIRE HEIGHT	21'-0"		21'-0"		21'-0"		21'-0"		21'-0"	21'-9"	21'-9"	21'-0"	21'-0"		21'-0"	
MESSENGER WIRE HEIGHT	24'-0"		24'-0"		24'-0"		24'-6"		25'-6"	24'-6"	25'-6"	24'-6"	24'-6"		24'-0"	
STAGGER	▲ 6"		0"		▼ 6"		▲ 6"		▼ 6"	▲ 6"	▼ 6"	▲ 6"	▲ 6"		▼ 6"	
POLE REFERENCE	501-3-30		501-3-30	501-3-30	501-2-30		500-35		501-3-30	501-3-30	501-3-30	501-3-30	500-35		501-2-30	
FOUNDATION REFERENCE	523-xx		523-xx	523-DGA 523-xx 523-DGA	523-xx	523-DGA	521-15		523-xx	523-xx	523-xx	523-xx	521-15	522-DGA	522-xx	
TERMINATION HEIGHT							26'-0"						26'-0"			
IN-SPAN ASSEMBLIES										431-2, 431-3	431-2, 431-3					
DOWN GUY ASSEMBLY				(2)449-1			449-1						449-1			
SUPPORT REGISTRATION REFERENCE	400-1		401-1		401-1		400-1		401-1	406-1	406-1	400-1	400-1		401-1	
HANGERS		210-195				210-194		210-194		210-145, 213-155	(2)214-150		210-145, 213-155	210-147		210-170
JUMPERS									428-3			428-3				
MISC. ASSEMBLIES AND FEEDERS 1							441-1		462-2				441-1			
MISC. ASSEMBLIES AND FEEDERS 2	460-2		460-2	(4)461-2	460-2		460-2		460-2			460-2	460-2		460-2	
SIGNAL POWER ASSEMBLY																

OCS PLAN SHEET

NOTES

1. ALL STATION LOCATIONS FOR CATENARY POLES AND ASSOCIATED DEVICES LOCATED ON A PIER OR MOUNTED SUPERSTRUCTURE ARE APPROXIMATE. SEE THE STRUCTURAL PLANS FOR EXACT LOCATION AND LAYOUT.

NOT FOR CONSTRUCTION

SERIES SYSPL-28 OF SYSPL-38

JKCELLMA

PLOT DATE: 7/19/2017 9:17:00 PM

HDR Engineering, Inc.
8550 W Bryn Mawr Ave., Suite 900
Chicago, IL 60631
www.hdrinc.com

Burns
BURNS ENGINEERING, INC. | 215 979-7700
TWO COMMERCE SQUARE, 2001 MARKET ST, SUITE 600
PHILADELPHIA, PA 19103

ISSUE	DATE	DESCRIPTION

NICTD
NORTHERN INDIANA COMMUTER TRANSPORTATION DISTRICT
33 East Highway 12
Chesterton, Indiana 46304

WEST LAKE CORRIDOR
DYER TO HAMMOND, INDIANA

DESIGNED: RSW
DRAWN: VJC
CHECKED: MP
DATE: 07/21/17

NICTD - WEST LAKE CORRIDOR - MP WL 61.38 TO WL 69.18
SINGLE TRACK

PLAN STA 3616+25 TO 3630+25 SYSTEM

FILENAME SHT_WL_OCS_PL_128.dgn
SCALE AS NOTED
SHEET 42 OF 248

SIGNAL POWER ASSEMBLY											
MISC. ASSEMBLIES AND FEEDERS 2				PORTAL	460-2	460-2		460-2	461-2, 429-1		
MISC. ASSEMBLIES AND FEEDERS 1				461-2, 429-1	462-2				508-X		
JUMPERS				508-X	428-2						
HANGERS						210-88	210-169		210-130	210-136	
SUPPORT REGISTRATION REFERENCE					400-1	401-1		401-1	401-1		
DOWN GUY ASSEMBLY				449-1					449-1		
IN-SPAN ASSEMBLIES											
TERMINATION HEIGHT											
FOUNDATION REFERENCE			522-DGA	522-XX	522-XX	522-xx		522-xx	522-xx	522-DGA	
POLE REFERENCE				501-3-30	501-3-30	501-4-30		501-3-30	501-3-30		
STAGGER						▼ 9"		▼ 6"	▲ 6"		
MESSENGER WIRE HEIGHT						24'-6"		24'-6"	24'-0"		
TROLLEY WIRE HEIGHT						21'-0"		21'-0"	21'-0"		
FACE OF POLE TO CENTERLINE TRACK				9'-0"	9'-0"	9'-0"		9'-0"	9'-0"		
STATIONING			3636+65	3637+50	3638+60	3639+48		3641+17	3642+47		
STRUCTURE NO.				68-42	68-43	68-44		68-45	68-46		

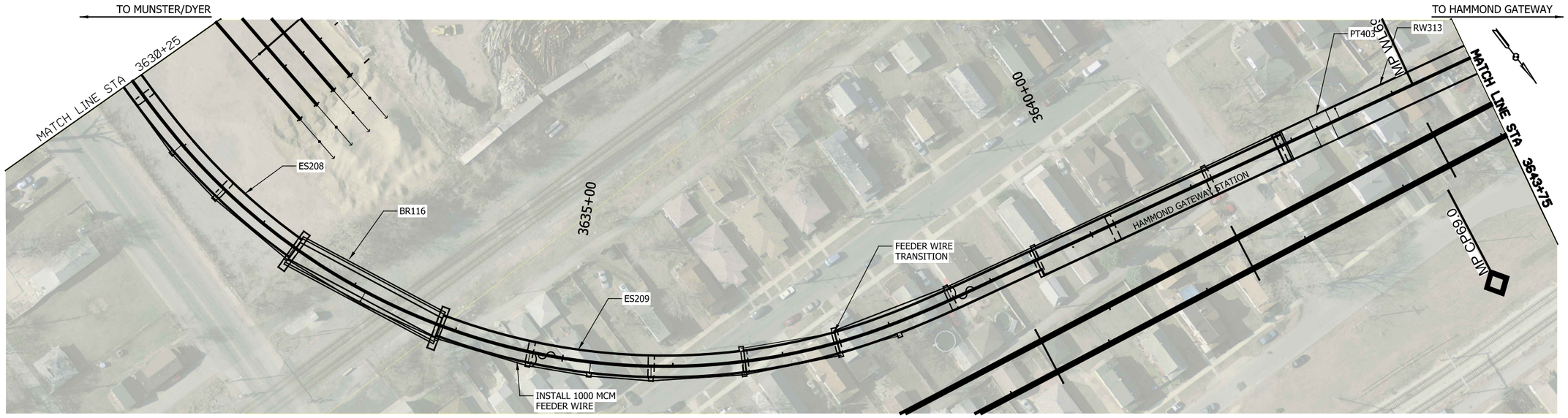

STRUCTURE NO.	68-33	68-34	68-35	68-36	68-37	68-38	68-39	68-40	68-41	68-42	
STATIONING	3630+98	3631+53	3632+35	3633+11	3633+86	3634+70	3635+25	3635+80	3636+63	3637+50	3638+08
FACE OF POLE TO CENTERLINE TRACK	9'-0"	9'-0"	9'-0"	x'-x"	9'-0"	9'-0"	9'-0"	9'-0"	9'-0"	9'-0"	
TROLLEY WIRE HEIGHT	21'-0"	21'-0"	21'-0"		21'-0"	21'-0"	21'-0"	21'-0"	21'-0"	21'-0"	
MESSENGER WIRE HEIGHT	24'-0"	24'-0"	24'-0"		24'-0"	24'-0"	24'-0"	24'-0"	24'-0"	24'-0"	
STAGGER	▼ 6"	▼ 6"	▼ 6"	▼ 6"	▼ 6"	▼ 6"	▼ 6"	▼ 6"	▼ 6"	▼ 6"	
POLE REFERENCE	501-4-30	501-4-30	501-4-30	501-4-30	501-4-30	501-4-30	501-4-30	501-4-30	501-4-30	501-4-30	
FOUNDATION REFERENCE	523-xx	523-xx	522-xx		522-xx	522-xx	522-xx	522-xx	522-xx	522-xx	522-DGA
TERMINATION HEIGHT											
IN-SPAN ASSEMBLIES											
DOWN GUY ASSEMBLY											
SUPPORT REGISTRATION REFERENCE	401-1	401-1	401-1		401-1	401-1	401-1	401-1	401-1	401-1	
HANGERS	210-55		210-82	210-151		210-84	210-55	210-55	210-83	210-87	210-85
JUMPERS						428-2					
MISC. ASSEMBLIES AND FEEDERS 1				418-2		460-2					
MISC. ASSEMBLIES AND FEEDERS 2	460-2	460-2	460-2	460-2	460-2	462-2	460-2	460-2	460-2	460-2	
SIGNAL POWER ASSEMBLY											

OCS PLAN SHEET

NOTES

1. ALL STATION LOCATIONS FOR CATENARY POLES AND ASSOCIATED DEVICES LOCATED ON A PIER OR MOUNTED SUPERSTRUCTURE ARE APPROXIMATE. SEE THE STRUCTURAL PLANS FOR EXACT LOCATION AND LAYOUT.

NOT FOR CONSTRUCTION

SERIES SYSPL-29 OF SYSPL-38

JKIELLMA

PLOT DATE: 7/19/2017 9:17:40 PM

HDR Engineering, Inc.
8550 W Bryn Mawr Ave., Suite 900
Chicago, IL 60631
www.hdrinc.com

Burns
BURNS ENGINEERING, INC. | 215 979-7700
TWO COMMERCE SQUARE, 2001 MARKET ST, SUITE 600
PHILADELPHIA, PA 19103

ISSUE	DATE	DESCRIPTION

NICTD
NORTHERN INDIANA COMMUTER TRANSPORTATION DISTRICT
33 East Highway 12
Chesterton, Indiana 46304

WEST LAKE CORRIDOR
DYER TO HAMMOND, INDIANA

DESIGNED: RSW
DRAWN: VJC
CHECKED: MP
DATE: 07/21/17

NICTD - WEST LAKE CORRIDOR - MP WL 61.38 TO WL 69.18
SINGLE TRACK

PLAN STA 3630+25 TO 3643+75 SYSTEM

FILENAME SHT_WL_OCS_PL_129.dgn
SCALE AS NOTED
SHEET 43 OF 248

SIGNAL POWER ASSEMBLY												
MISC. ASSEMBLIES AND FEEDERS 2	460-2		460-2		460-2	460-2	460-2	460-2	460-2	460-1		
MISC. ASSEMBLIES AND FEEDERS 1	462-2							462-2	PORTAL	503-1		
JUMPERS	428-2							428-2		431-1		
HANGERS		210-136		210-126	210-96	210-81	210-100	210-100		210-109	210-xx	
SUPPORT REGISTRATION REFERENCE	401-1	210-136	400-1	210-126	401-1	401-1	401-1	401-1	416-6, 417-1, 417-2	416-6, 417-1, 417-2		
DOWN GUY ASSEMBLY												449-1
IN-SPAN ASSEMBLIES												
TERMINATION HEIGHT												
FOUNDATION REFERENCE	523-xx		523-xx		523-xx	523-xx	523-xx	523-xx	523-xx			
POLE REFERENCE	501-3-30		501-3-30		501-3-30	501-4-30	501-4-30	501-4-30	501-4-30	525-40-8		500-40-8
STAGGER	▲ 6"		▼ 6"		▲ 6"	▲ 6"	▲ 6"	▲ 6"	▲ 6"	▲ 6"		
MESSENGER WIRE HEIGHT	24'-0"		24'-0"		24'-0"	24'-0"	24'-0"	24'-0"	24'-0"	24'-0"		
TROLLEY WIRE HEIGHT	21'-0"		21'-0"		21'-0"	21'-0"	21'-0"	21'-0"	21'-0"	21'-0"		
FACE OF POLE TO CENTERLINE TRACK	9'-0"		9'-0"		9'-0"	9'-0"	9'-0"	9'-0"	9'-0"	9'-0"		
STATIONING	3643+83		3645+19		3646+45	3647+41	3648+22	3649+22	3650+22	3651+31	3652+35	3653+15	3653+74
STRUCTURE NO.	69-03		69-04		69-05	69-06	69-07	69-08	69-09	69-10	69-11 EXISTING	69-12 EXISTING	69-12A

TO MUNSTER/DYER

TO MILLENIUM STATION

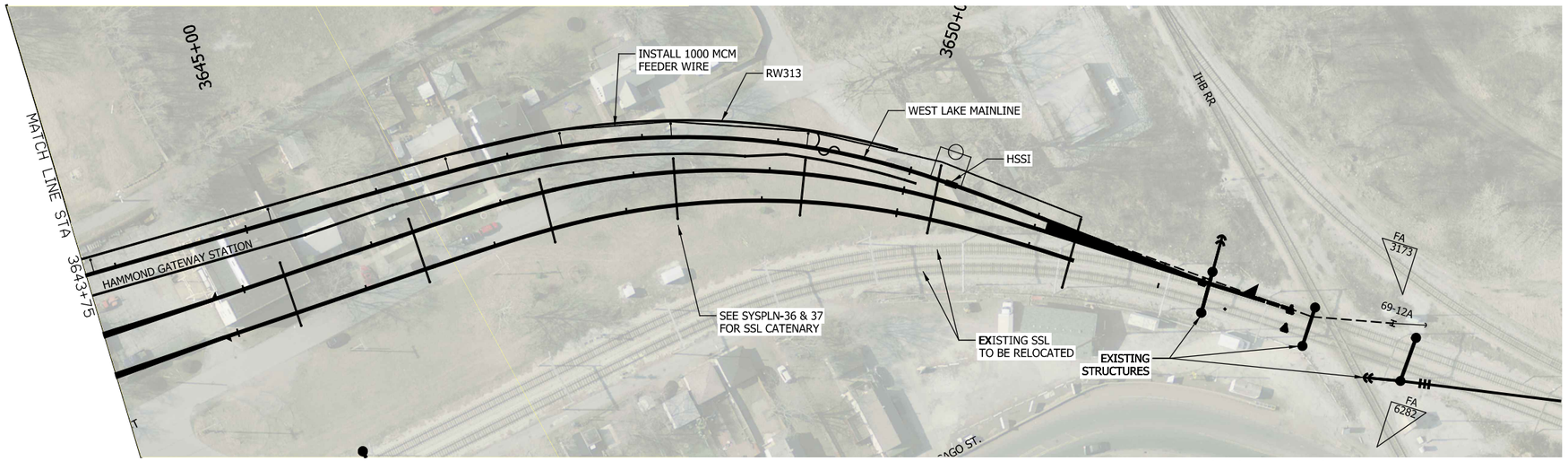

SCALE: 1" = 50'
0' 25' 50'

STRUCTURE NO.	69-09	69-10	69-11 EXISTING	69-12 EXISTING
STATIONING	3650+22	3651+31	3652+35	3653+15
FACE OF POLE TO CENTERLINE TRACK	9'-0"	9'-0"		
TROLLEY WIRE HEIGHT				
MESSENGER WIRE HEIGHT				
STAGGER				
POLE REFERENCE	501-4-30	525-40-8		
FOUNDATION REFERENCE	523-xx			
TERMINATION HEIGHT				
IN-SPAN ASSEMBLIES				
DOWN GUY ASSEMBLY				
SUPPORT REGISTRATION REFERENCE				
HANGERS				
JUMPERS				
MISC. ASSEMBLIES AND FEEDERS 1				
MISC. ASSEMBLIES AND FEEDERS 2				
SIGNAL POWER ASSEMBLY				

OCS PLAN SHEET

NOTES

1. XXXX
2. XXXX
3. XXXX
4. XXXX

NOT FOR CONSTRUCTION

SERIES SYSPL-30 OF SYSPL-38

JKIELLMA

PLOT DATE: 7/21/2017 9:30:52 AM

HDR Engineering, Inc.
8550 W Bryn Mawr Ave., Suite 900
Chicago, IL 60631
www.hdrinc.com

Burns
BURNS ENGINEERING, INC. | 215 979-7700
TWO COMMERCE SQUARE, 2001 MARKET ST, SUITE 600
PHILADELPHIA, PA 19103

ISSUE	DATE	DESCRIPTION

NICTD
NORTHERN INDIANA COMMUTER TRANSPORTATION DISTRICT
33 East Highway 12
Chesterton, Indiana 46304

WEST LAKE CORRIDOR
DYER TO HAMMOND, INDIANA

DESIGNED: RSW
DRAWN: VJC
CHECKED: MP
DATE: 07/21/17

NICTD - WEST LAKE CORRIDOR - MP WL 61.38 TO WL 69.18
SINGLE TRACK

PLAN STA 3643+75 TO 3654+00 SYSTEM

FILENAME SHT_WL_OCS_PL_130.dgn
SCALE AS NOTED

SHEET 44 OF 248

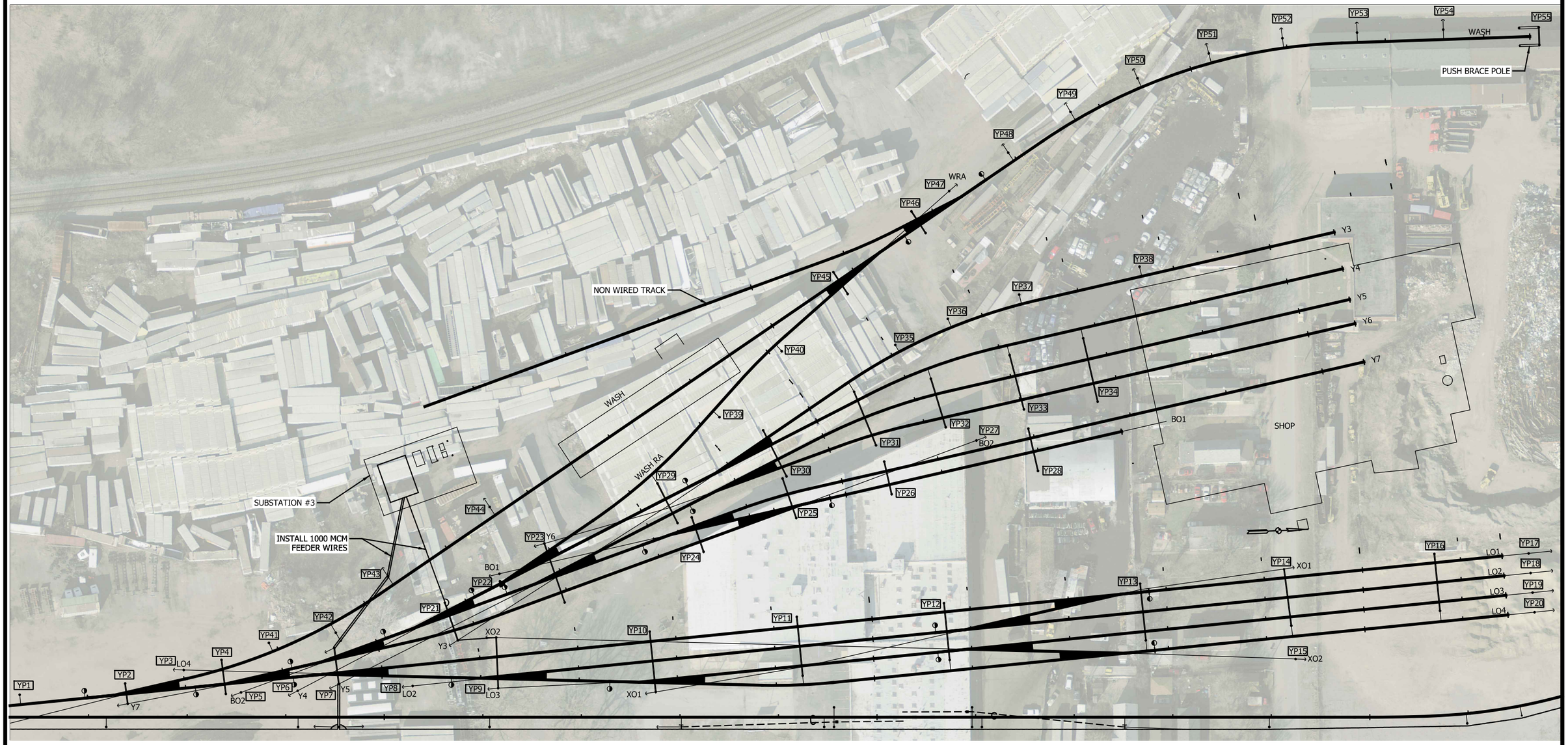

SCALE: 1" = 50'
0' 25' 50'

NOT FOR CONSTRUCTION

SERIES SYSPL-31 OF SYSPL-38

JKOELLMA

PLOT DATE: 7/19/2017 9:18:56 PM

HDR Engineering, Inc.
8550 W Bryn Mawr Ave., Suite 900
Chicago, IL 60631
www.hdrinc.com

Burns
BURNS ENGINEERING, INC. | 215 979-7700
TWO COMMERCE SQUARE, 2001 MARKET ST, SUITE 600
PHILADELPHIA, PA 19103

ISSUE	DATE	DESCRIPTION

NICTD
NORTHERN INDIANA COMMUTER TRANSPORTATION DISTRICT
33 East Highway 12
Chesterton, Indiana 46304

WEST LAKE CORRIDOR
DYER TO HAMMOND, INDIANA

DESIGNED:	RSW
DRAWN:	MJA
CHECKED:	MP
DATE:	07/21/17

NICTD - WEST LAKE CORRIDOR - MP WL 61.38 TO WL 69.18
SINGLE TRACK

PLAN YARD KEY PLAN SYSTEM

FILENAME	SHT_WL_OCS_PL_131.dgn
SCALE	AS NOTED

SHEET 45 OF 248

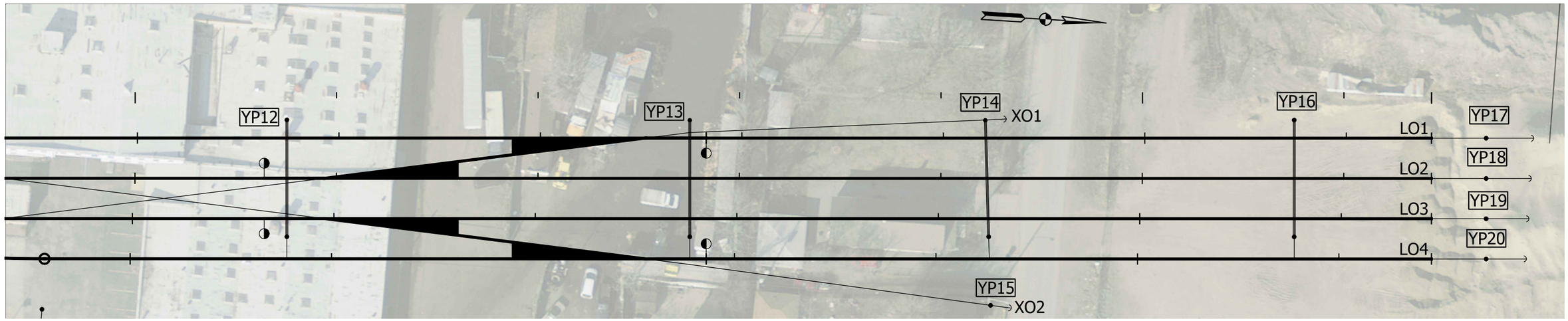

BO = BAD ORDER
LO = LAYOVER
WRA = WASH RUN-AROUND
Y = YARD

OCS PLAN SHEET

SCALE: 1" = 25'
0' 12.5' 25'

NOTES

1. XXXX
2. XXXX
3. XXXX
4. XXXX

NOT FOR CONSTRUCTION

SERIES SYSPL-32 OF SYSPL-38

JKIELLMA
7/19/2017
9:19:28 PM
PLOT DATE:

HDR Engineering, Inc.
8550 W Bryn Mawr Ave., Suite 900
Chicago, IL 60631
www.hdrinc.com

Burns
BURNS ENGINEERING, INC. | 215 979-7700
TWO COMMERCE SQUARE, 2001 MARKET ST, SUITE 600
PHILADELPHIA, PA 19103

ISSUE	DATE	DESCRIPTION

NICTD
NORTHERN INDIANA COMMUTER
TRANSPORTATION DISTRICT
33 East Highway 12
Chesterton, Indiana 46304

WEST LAKE CORRIDOR
DYER TO HAMMOND, INDIANA

DESIGNED: RSW
DRAWN: MJA
CHECKED: MP
DATE: 07/21/17

NICTD - WEST LAKE CORRIDOR - MP WL 61.38 TO WL 69.18
SINGLE TRACK

PLAN YARD (1 OF 3)
SYSTEM

FILENAME SHT_WL_OCS_PL_132.dgn
SCALE AS NOTED
SHEET 46 OF 248

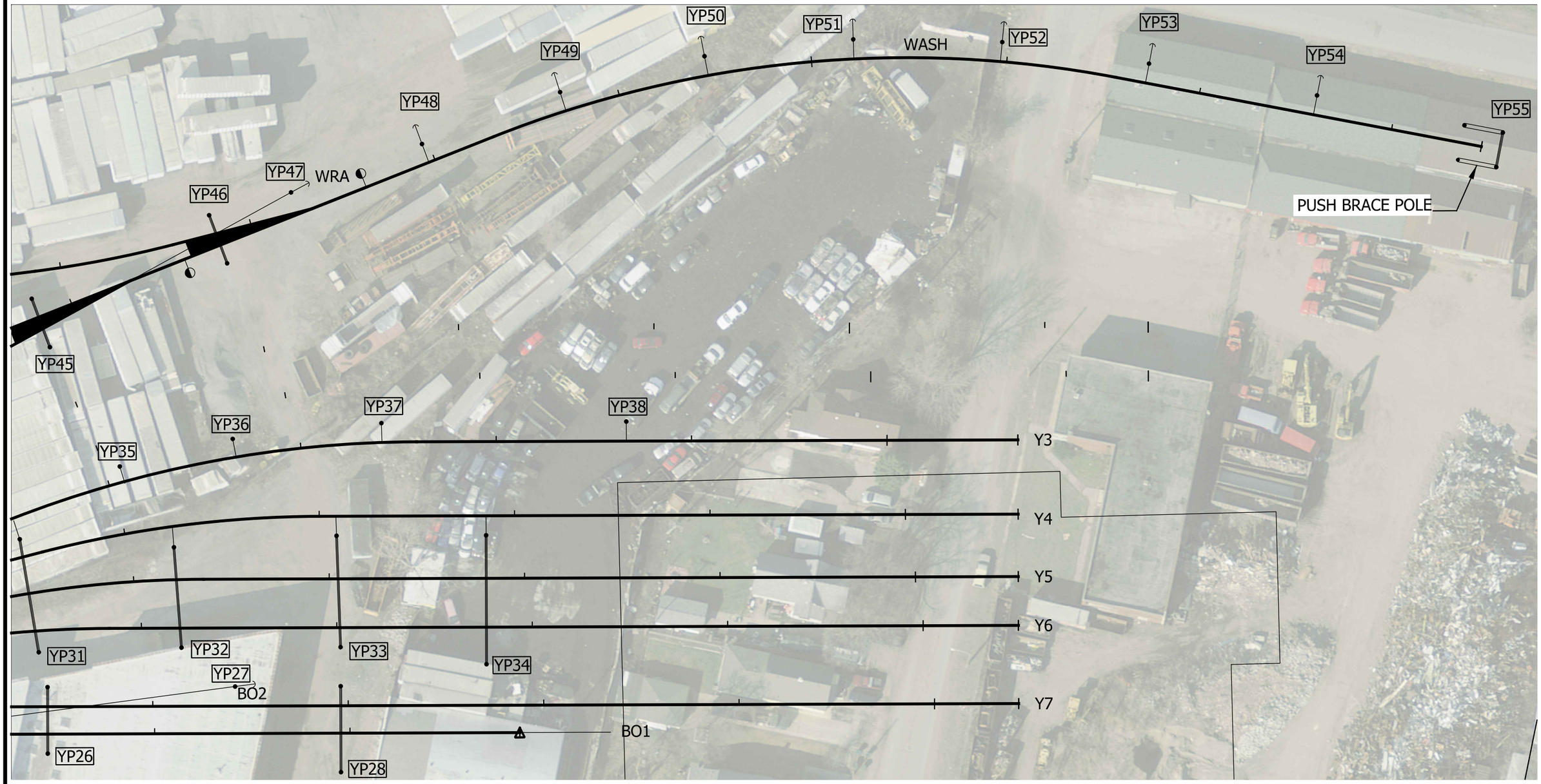

BO = BAD ORDER
LO = LAYOVER
WRA = WASH RUN-AROUND
Y = YARD

OCS PLAN SHEET

NOTES

1. XXXX
2. XXXX
3. XXXX
4. XXXX

SCALE: 1" = 25'
0' 12.5' 25'

NOT FOR CONSTRUCTION

SERIES SYSPL-33 OF SYSPL-38

JKIELLMA
7/19/2017 9:20:06 PM
PLOT DATE:

HDR Engineering, Inc.
8550 W Bryn Mawr Ave., Suite 900
Chicago, IL 60631
www.hdrinc.com

Burns
BURNS ENGINEERING, INC. | 215 979-7700
TWO COMMERCE SQUARE, 2001 MARKET ST, SUITE 600
PHILADELPHIA, PA 19103

ISSUE	DATE	DESCRIPTION

NICTD
NORTHERN INDIANA COMMUTER TRANSPORTATION DISTRICT
33 East Highway 12
Chesterton, Indiana 46304

WEST LAKE CORRIDOR
DYER TO HAMMOND, INDIANA

DESIGNED: RSW
DRAWN: MJA
CHECKED: MP
DATE: 07/21/17

NICTD - WEST LAKE CORRIDOR - MP WL 61.38 TO WL 69.18
SINGLE TRACK

PLAN YARD (2 OF 3) SYSTEM

FILENAME SHT_WL_OCS_PL_133.dgn
SCALE AS NOTED
SHEET 47 OF 248

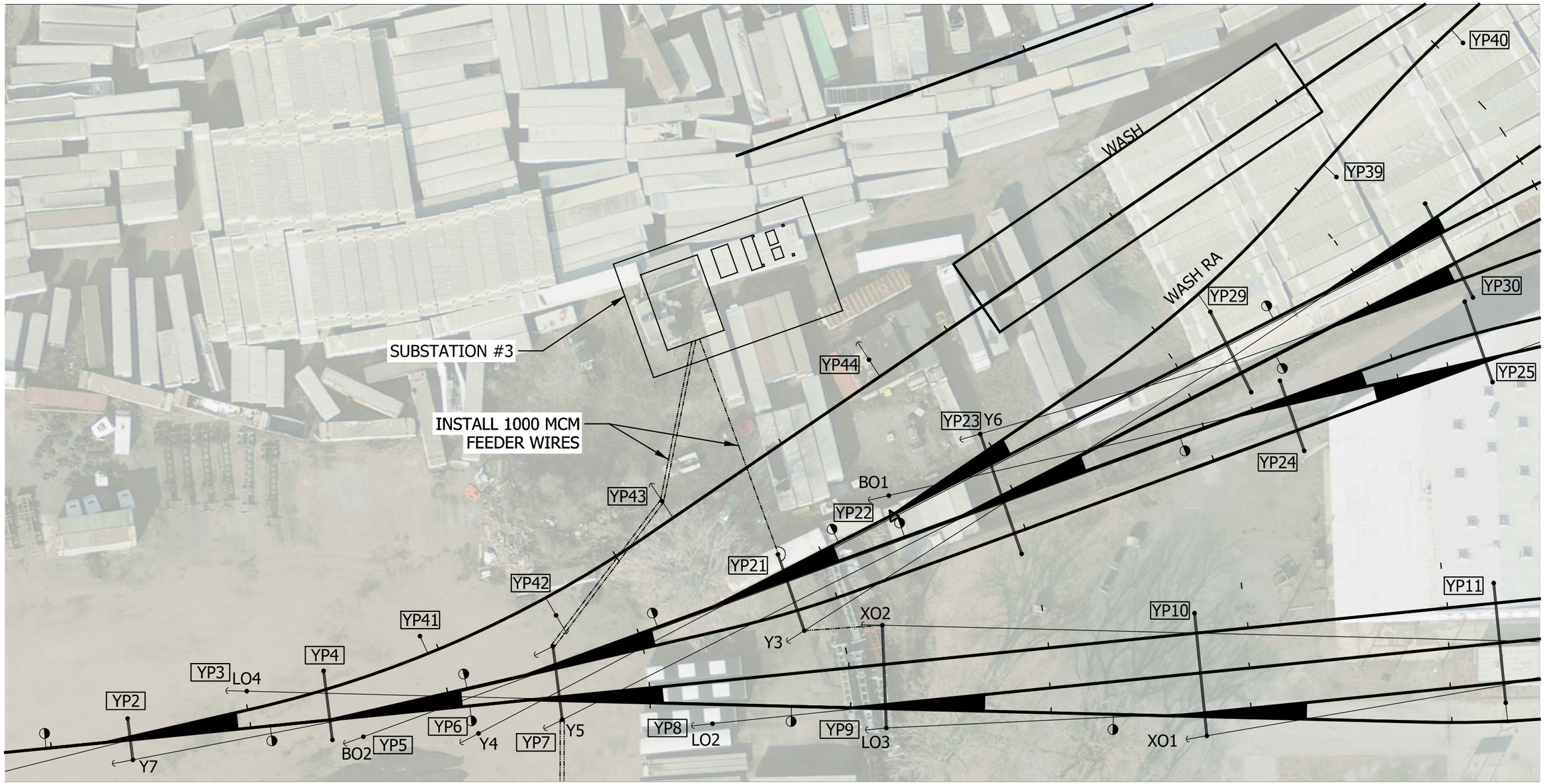

BO = BAD ORDER
LO = LAYOVER
WRA = WASH RUN-AROUND
Y = YARD

OCS PLAN SHEET

NOTES

1. XXXX
2. XXXX
3. XXXX
4. XXXX

SCALE: 1" = 25'
0' 12.5' 25'

NOT FOR CONSTRUCTION

SERIES SYSPL-34 OF SYSPL-38

JKELLMA

PLOT DATE: 7/19/2017 9:20:42 PM

HDR Engineering, Inc.
8550 W Bryn Mawr Ave., Suite 900
Chicago, IL 60631
www.hdrinc.com

Burns
BURNS ENGINEERING, INC. | 215 979-7700
TWO COMMERCE SQUARE, 2001 MARKET ST, SUITE 600
PHILADELPHIA, PA 19103

ISSUE	DATE	DESCRIPTION

NICTD
NORTHERN INDIANA COMMUTER TRANSPORTATION DISTRICT
33 East Highway 12
Chesterton, Indiana 46304

WEST LAKE CORRIDOR
DYER TO HAMMOND, INDIANA

DESIGNED: RSW
DRAWN: MJA
CHECKED: MP
DATE: 07/21/17

NICTD - WEST LAKE CORRIDOR - MP WL 61.38 TO WL 69.18
SINGLE TRACK

PLAN YARD (3 OF 3) SYSTEM

FILENAME SHT_WL_OCS_PL_134.dgn
SCALE AS NOTED

SHEET 48 OF 248

STRUCTURE	STA.	TRK	OFFSET	POLE REF	REGISTRATION	DOWN GUY	TERMINATION	FEEDER	PORTAL
YP1		YL	10'-0"	525-40-8	400-1				
YP2		YL	10'-0"	525-40-8	416-1 (2), 417-1, 417-2 (2)				503-1
		YL	10'-0"	525-40-8		449-1	440-1, 440-2		
YP3		W	10'-0"	525-40-8		449-1	440-1, 440-2		
YP4		W	10'-0"	525-40-8	416-1 (3), 417-1, 417-2 (2)				503-1
		YL	10'-0"	525-40-8					
YP5		YL	10'-0"	525-40-8		449-1	440-1, 440-2		
YP6		YL	14'-0"	525-40-8		449-1	440-1, 440-2		
YP7		YL	10'-0"	525-40-8	416-1 (4), 417-1, 417-2 (4)	449-1		461-2, 429-1, 429-6 (2)	503-1
		LO4	10'-0"	525-40-8		449-2	440-1, 440-2	429-6 (2), 461-2	
YP8		LO4	10'-0"	525-40-8		449-1	440-1, 440-2		
YP9		LO1	10'-0"	525-40-8	416-1 (3), 417-1, 417-2 (3)	449-1	440-1, 440-2		503-3
		LO4	10'-0"	525-40-8		449-1	440-1, 440-2		
YP10		LO1	10'-0"	525-40-8	416-1 (4), 417-1, 417-2 (4)				503-3
		LO4	10'-0"	525-40-8		449-1	440-1, 440-2		
YP11		LO1	10'-0"	525-40-8	416-1 (5), 417-1, 417-2 (5)				503-3
		LO4	10'-0"	525-40-8	400-1				
YP12		LO1	9'-0"	525-40-8	416-1 (5), 417-1, 417-2 (5)				503-3
		LO4	9'-0"	525-40-8	401-1				
YP13		LO1	9'-0"	525-40-8	416-1 (4), 417-1, 417-2 (4)				503-3
		LO4	9'-0"	525-40-8	406-1				
YP14		LO1	9'-0"	525-40-8	416-1 (4), 417-1, 417-2 (4)	449-1	440-1, 440-2		503-3
		LO4	9'-0"	525-40-8	401-1				
YP15		LO4	23'-0"	525-40-8		449-1	440-1, 440-2		
YP16		LO1	9'-0"	525-40-8	416-(3), 417-1, 417-2 (3)				503-3
		LO4	9'-0"	525-40-8	400-1				
YP17		LO1	27'-0"	525-40-8		449-1	440-1, 440-2		
YP18		LO2	27'-0"	525-40-8		449-1	440-1, 440-2		
YP19		LO3	27'-0"	525-40-8		449-1	440-1, 440-2		
YP20		LO4	27'-0"	525-40-8		449-1	440-1, 440-2		
YP21		YL	8'-9"	525-40-8	416-1 (4), 417-1, 417-2 (4)			461-2, 462-2	503-3
		BO1	10'-6"	525-40-8		449-1	440-1, 440-2		
YP22		WRA	9'-0"	525-40-8		449-1	440-1, 440-2		
YP23		WRA	9'-0"	525-40-8	416-1 (6), 417-1, 417-2 (6)	449-1	440-1, 440-2		503-3
		BO1	10'-0"	525-40-8					
YP24		Y7	9'-3"	525-40-8	416-1 (3), 417-1, 417-2 (3)				503-3
		BO1	10'-9"	525-40-8					
YP25		Y7	16'-9"	525-40-8	416-3 (3), 417-1, 417-2 (3)				503-3
		BO1	10'-10"	525-40-8					
YP26		Y7	10'-0"	525-40-8	416-1 (3), 417-1, 417-2 (3)				503-1
		BO1	10'-0"	525-40-8					

STRUCTURE	STA.	TRK	OFFSET	POLE REF	REGISTRATION	DOWN GUY	TERMINATION	FEEDER	PORTAL
YP27		Y7	10'-0"	525-40-8		449-1	440-1, 440-2		
YP28		Y7	10'-0"	525-40-8	416-1 (2), 417-1, 417-2 (2)				503-3
		BO1	20'-0"	525-40-8					
YP29		WRA	11'-0"	525-40-8	401-1				503-3
		Y6	10'-0"	525-40-8	416-1 (4), 417-1, 417-2 (4)				
YP30		Y3	8'-9"	525-40-8	416-1 (4), 417-1, 417-2 (4)				503-3
		Y6	10'-3"	525-40-8					
YP31		Y3	11'-0"	525-40-8	400-1				503-3
		Y6	10'-0"	525-40-8	416-3 (3), 417-1, 417-2 (3)				
YP32		Y4	10'-0"	525-40-8	400-1				503-3
		Y6	10'-0"	525-40-8	416-3 (2), 417-1, 417-2 (2)				
YP33		Y4	10'-0"	525-40-8	401-1				503-3
		Y6	10'-0"	525-40-8	416-1 (2), 417-1, 417-2 (2)				
YP34		Y4	10'-0"	525-40-8	400-1				503-3
		Y6	10'-0"	525-40-8	416-1 (2), 417-1, 417-2 (2)				
YP35		Y3	10'-0"	525-40-8	401-1				
YP36		Y3	10'-0"	525-40-8	401-1				
YP37		Y3	10'-0"	525-40-8	401-1				
YP38		Y3	10'-0"	525-40-8	400-1				
YP39		WRA	10'-0"	525-40-8	401-1				
YP40		WRA	10'-0"	525-40-8	400-1				
YP41		W	10'-0"	525-40-8	400-1				
YP42		W	10'-0"	525-40-8	401-1	449-1			
YP43		W	10'-0"	525-40-8	400-1	449-1		460-1 (2)	
YP44		W	10'-0"	525-40-8	401-1	449-1			
YP45		W	10'-0"	525-40-8	416-1 (2), 417-1, 417-2 (2)				503-1
		WRA	10'-0"	525-40-8					
YP46		W	10'-0"	525-40-8	416-1 (2), 417-1, 417-2 (2)				503-1
		W	10'-0"	525-40-8					
YP47		W	10'-0"	525-40-8		449-1	440-1, 440-2		
YP48		W	10'-0"	525-40-8	401-1	449-1			
YP49		W	10'-0"	525-40-8	401-1	449-1			
YP50		W	10'-0"	525-40-8	401-1	449-1			
YP51		W	10'-0"	525-40-8	401-1	449-1			
YP52		W	10'-0"	525-40-8	401-1	449-1			
YP53		W	10'-0"	525-40-8	401-1	449-1			
YP54		W	10'-0"	525-40-8	401-1	449-1			
YP55		W	10'-0"	525-40-8			440-3, 440-4		503-3
		W	10'-0"	525-40-8					

TRACK LEGEND:
BO - BAD ORDER
LO - LAYOVER
W - WASH
WRA - WASH RUN AROUND
Y - YARD
YL - YARD LEAD

JKOELLMA

PLOT DATE: 7/19/2017 9:20:58 PM

NOT FOR CONSTRUCTION

SERIES SYSPL-35 OF SYSPL-38

HDR Engineering, Inc.
8550 W Bryn Mawr Ave., Suite 900
Chicago, IL 60631
www.hdrinc.com

Burns
BURNS ENGINEERING, INC. | 215 979-7700
TWO COMMERCE SQUARE, 2001 MARKET ST, SUITE 600
PHILADELPHIA, PA 19103

ISSUE	DATE	DESCRIPTION

NICTD
NORTHERN INDIANA COMMUTER TRANSPORTATION DISTRICT
33 East Highway 12
Chesterton, Indiana 46304

WEST LAKE CORRIDOR
DYER TO HAMMOND, INDIANA

DESIGNED: RSW
DRAWN: MJA
CHECKED: MP
DATE: 07/21/17

NICTD - WEST LAKE CORRIDOR - MP WL 61.38 TO WL 69.18
SINGLE TRACK

YARD POLE TABLE SYSTEM

FILENAME SHT_WL_OCS_PL_134A.dgn
SCALE AS NOTED
SHEET 49 OF 248

NIPSCO ASSEMBLY	-	-	-	-	-	-	-	-
MISC. ASSEMBLIES AND FEEDERS 2	417-2-42	417-2-42	417-2-42/503-1					417-2-42/503-1
MISC. ASSEMBLIES AND FEEDERS 1	460-1	460-1	460-1	460-1	460-1	460-1	460-1	460-1
JUMPERS	-	-	-	-	-	-	-	-
HANGERS	-	-	-	-	-	-	-	-
SUPPORT REGISTRATION REFERENCE	417-1/416-1	417-1/416-2	417-1/416-2	401-1	401-1	401-1	401-1	417-1/416-2
DOWN GUY ASSEMBLY	-	-	-	449-1	449-1/449-2	449-2	-	-
IN-SPAN ASSEMBLIES	-	-	-	-	-	-	-	-
TERMINATION HEIGHT	-	-	-	-	-	-	-	-
FOUNDATION REFERENCE	-	-	-	-	-	-	-	-
POLE REFERENCE	-	-	525-40-8	525-40-8	525-40-8	525-40-8	525-40-8	525-40-8
STAGGER	6"	▲ 6"	▼ 6"	▲ 6"	▲ 8"	▲ 6"	▼ 6"	▲ 6"
MESSENGER WIRE HEIGHT	24'-6"	24'-6"	25'-6"	25'-6"	25'-6"	25'-6"	25'-6"	25'-6"
TROLLEY WIRE HEIGHT	22'-6"	22'-6"	22'-6"	22'-6"	22'-6"	22'-6"	22'-6"	22'-6"
FACE OF POLE TO CENTERLINE TRACK	16'-6"	9'-2"	9'-0"	9'-0"	9'-0"	9'-0"	9'-0"	9'-0"
STATIONING	3627+18	3628+50	3629+65	3631+12	3632+22	3633+32	3635+32	3637+32
STRUCTURE NO.	68-25	68-26	68-27	68-28	68-29	68-30	68-31	68-32
	EXISTING	EXISTING	NEW	NEW	NEW	NEW	NEW	NEW

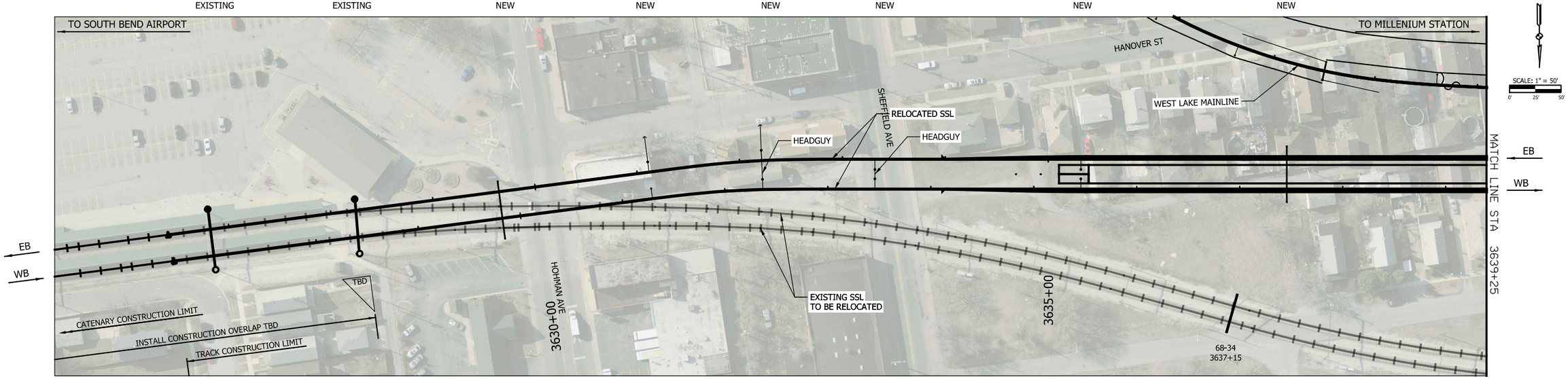

	EXISTING	EXISTING	NEW	NEW	NEW	NEW	NEW	NEW
STRUCTURE NO.	68-25	68-26	68-27	68-28	68-29	68-30	68-31	68-32
STATIONING	3627+18	3628+50	3629+65	3631+12	3632+22	3633+32	3635+32	3637+32
FACE OF POLE TO CENTERLINE TRACK	11'-4 1/4"	13'-6"	-	9'-0"	9'-0"	9'-0"	9'-0"	9'-0"
TROLLEY WIRE HEIGHT	22'-6"	22'-6"	22'-6"	22'-6"	22'-6"	22'-6"	22'-6"	22'-6"
MESSENGER WIRE HEIGHT	25-0"	24'-6"	25'-6"	25'-6"	25'-6"	24'-6"	25'-6"	25'-6"
STAGGER	▼ 6"	▲ 9"	▼ 6"	▲ 6"	▲ 6"	0"	▼ 6"	▲ 6"
POLE REFERENCE	-	-	525-40-8	525-40-8	525-40-8	525-40-8	525-40-8	525-40-8
FOUNDATION REFERENCE	-	-	-	-	-	-	-	-
TERMINATION HEIGHT	-	-	-	-	-	-	-	-
IN-SPAN ASSEMBLIES	-	-	-	-	-	-	-	-
DOWN GUY ASSEMBLY	-	-	-	-	-	-	-	-
SUPPORT REGISTRATION REFERENCE	416-2/417-2-42	416-2/417-2-42	416-2/417-2-42	401-1	401-1	401-1	400-1	416-2/417-2-42
HANGERS	-	-	-	-	-	-	-	-
JUMPERS	-	-	-	-	-	-	-	-
MISC. ASSEMBLIES AND FEEDERS 1	460-1	460-1	460-1	460-1	460-1	460-1	460-1	460-1
MISC. ASSEMBLIES AND FEEDERS 2	-	-	-	-	-	-	-	-
NIPSCO ASSEMBLY	-	-	-	-	-	-	-	-

OCS PLAN SHEET

NOTES

1. XXXX
2. XXXX
3. XXXX
4. XXXX

NOT FOR CONSTRUCTION

SERIES SYSPL-36 OF SYSPL-38

JKOELLMA

PLOT DATE: 7/19/2017 9:21:48 PM

HDR Engineering, Inc.
8550 W Bryn Mawr Ave., Suite 900
Chicago, IL 60631
www.hdrinc.com

Burns
BURNS ENGINEERING, INC. | 215 979-7700
TWO COMMERCE SQUARE, 2001 MARKET ST, SUITE 600
PHILADELPHIA, PA 19103

ISSUE	DATE	DESCRIPTION
1	XX/XX/XXXX	DESCRIPTION

NICTD
NORTHERN INDIANA COMMUTER TRANSPORTATION DISTRICT
33 East Highway 12
Chesterton, Indiana 46304

WEST LAKE CORRIDOR
DYER TO HAMMOND, INDIANA

DESIGNED: RSW
DRAWN: VJC
CHECKED: MP
DATE: 07/21/17

NICTD - WEST LAKE CORRIDOR - MP WL 61.38 TO WL 69.18
SINGLE TRACK

PLAN SSL (1 OF 2) SYSTEM

FILENAME SHT_WL_OCS_PL_135.dgn
SCALE AS NOTED
SHEET 50 OF 248

NIPSCO ASSEMBLY	-	-	-	-	-	-	-	-	-	-		-
MISC. ASSEMBLIES AND FEEDERS 2	417-2-42/503-1	417-2-42/503-1	417-2-42/503-1	417-2-42/503-1	417-2-42/503-1	417-2-42/503-1	417-2-42/503-1	417-2-42/503-1	417-2-42/503-1	417-2-42/503-1		456-3/503-1
MISC. ASSEMBLIES AND FEEDERS 1	460-1	460-1	460-1	460-1	460-1	460-1	460-1	460-1	460-1	460-1		460-1
JUMPERS	-	-	-	-	-	-	-	-	-	-		-
HANGERS	-	-	-	-	-	-	-	-	-	-		-
SUPPORT REGISTRATION REFERENCE	417-1/416-2	417-1/416-2	417-1/416-2	417-1/416-2	417-1/416-2	417-1/416-2	417-1/416-2	417-1/416-2	417-1/416-2	417-1/416-2		-
DOWN GUY ASSEMBLY	-	-	-	-	-	-	-	-	-	-		-
IN-SPAN ASSEMBLIES	-	-	-	-	-	-	-	-	-	-		-
TERMINATION HEIGHT	-	-	-	-	-	-	-	-	-	-		-
FOUNDATION REFERENCE	-	-	-	-	-	-	-	-	-	-		-
POLE REFERENCE	525-40-8	525-40-8	525-40-8	525-40-8	525-40-8	525-40-8	525-40-8	525-40-8	525-40-8	525-40-8		525-40-8
STAGGER	▼ 6"	▲ 6"	▼ 6"	▼ 6"	▲ 6"	▲ 6"	▲ 6"	▲ 6"	▲ 6"	▲ 3"		3"
MESSENGER WIRE HEIGHT	25'-6"	25'-6"	25'-6"	25'-6"	25'-6"	25'-6"	25'-6"	25'-6"	25'-6"	25'-6"		24'-3"
TROLLEY WIRE HEIGHT	22'-6"	22'-6"	22'-6"	22'-6"	22'-6"	22'-6"	22'-6"	22'-6"	22'-6"	22'-6"		22'-3"
FACE OF POLE TO CENTERLINE TRACK	9'-0"	9'-0"	9'-0"	9'-0"	9'-0"	9'-0"	9'-0"	9'-0"	9'-0"	9'-0"		9'-6"
STATIONING	3639+32	3641+32	3643+32	3645+32	3646+32	3647+32	3648+31	3649+26			3652+35	3653+15
STRUCTURE NO.	68-33	68-34	68-35	69-04	69-05	69-06	69-07	69-08	69-09	69-10	69-11	69-12
	NEW	NEW	NEW	NEW	NEW	NEW	NEW	NEW	NEW	NEW	EXISTING	EXISTING

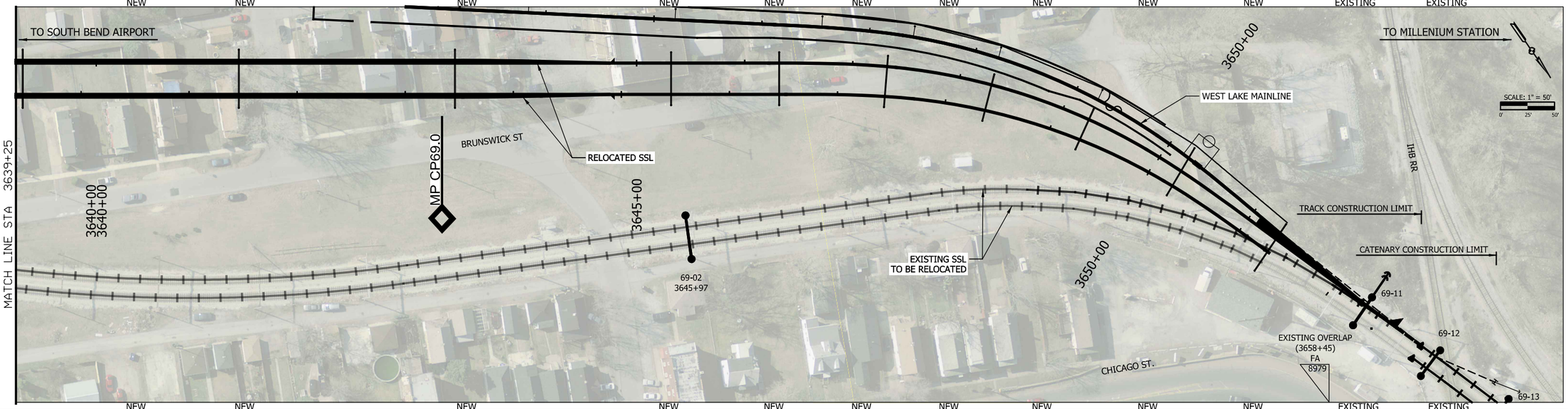

STRUCTURE NO.	68-33	68-34	68-35	69-04	69-05	69-06	69-07	69-08	69-09	69-10	69-11	69-12
STATIONING	3639+32	3641+32	3643+32	3645+32	3646+32	3647+32	3648+31	3649+26	3650+25	3351+32	3652+35	3653+15
FACE OF POLE TO CENTERLINE TRACK	9'-0"	9'-0"	9'-0"	9'-0"	9'-0"	9'-0"	9'-0"	9'-0"	9'-0"	9'-0"		9'-6"
TROLLEY WIRE HEIGHT	22'-6"	22'-6"	22'-6"	22'-6"	22'-6"	22'-6"	22'-6"	22'-6"	22'-6"	22'-6"		22'-3"
MESSENGER WIRE HEIGHT	25'-6"	25'-6"	25'-6"	25'-6"	25'-6"	25'-6"	25'-6"	25'-6"	25'-6"	25'-6"		24'-3"
STAGGER	▼ 6"	▲ 6"	▼ 6"	▼ 6"	▲ 6"	▲ 6"	▲ 6"	▲ 6"	▲ 6"	▲ 6"		3"
POLE REFERENCE	525-40-8	525-40-8	525-40-8	525-40-8	525-40-8	525-40-8	525-40-8	525-40-8	525-40-8	525-40-8		525-40-8
FOUNDATION REFERENCE	-	-	-	-	-	-	-	-	-	-		-
TERMINATION HEIGHT	-	-	-	-	-	-	-	-	-	-		-
IN-SPAN ASSEMBLIES	-	-	-	-	-	-	-	-	-	-		-
DOWN GUY ASSEMBLY	-	-	-	-	-	-	-	-	-	-		-
SUPPORT REGISTRATION REFERENCE	416-2	416-2	416-2	416-2	416-2	416-2	416-2	416-2	416-2	416-2		416-2/417-4
HANGERS	-	-	-	-	-	-	-	-	-	-		-
JUMPERS	-	-	-	-	-	-	-	-	-	-		-
MISC. ASSEMBLIES AND FEEDERS 1	460-1	460-1	460-1	460-1	460-1	460-1	460-1	460-1	460-1	460-1		460-1
MISC. ASSEMBLIES AND FEEDERS 2	417-2-42	417-2-42	417-2-42	417-2-42	417-2-42	417-2-42	417-2-42	417-2-42	417-2-42	417-2-42		-
NIPSCO ASSEMBLY	-	-	-	-	-	-	-	-	-	-		-

OCS PLAN SHEET

NOTES

1. XXXX
2. XXXX
3. XXXX
4. XXXX

NOT FOR CONSTRUCTION

SERIES SYSPL-37 OF SYSPL-38

JKOELLMA

PLOT DATE: 7/19/2017 9:22:25 PM

HDR Engineering, Inc.
8550 W Bryn Mawr Ave., Suite 900
Chicago, IL 60631
www.hdrinc.com

Burns
BURNS ENGINEERING, INC. | 215 979-7700
TWO COMMERCE SQUARE, 2001 MARKET ST, SUITE 600
PHILADELPHIA, PA 19103

ISSUE	DATE	DESCRIPTION
1	XX/XX/XXXX	DESCRIPTION

NICTD
NORTHERN INDIANA COMMUTER TRANSPORTATION DISTRICT
33 East Highway 12
Chesterton, Indiana 46304

WEST LAKE CORRIDOR
DYER TO HAMMOND, INDIANA

DESIGNED: RSW
DRAWN: VJC
CHECKED: MP
DATE: 07/21/17

NICTD - WEST LAKE CORRIDOR - MP WL 61.38 TO WL 69.18
SINGLE TRACK

PLAN SSL (2 OF 2) SYSTEM

FILENAME SHT_WL_OCS_PL_136.dgn
SCALE AS NOTED
SHEET 51 OF 248

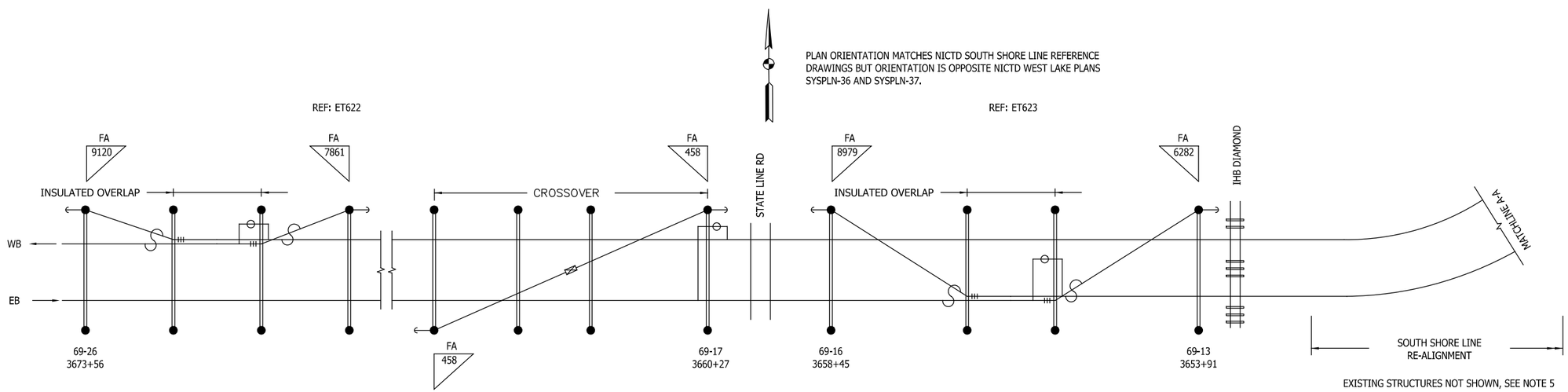

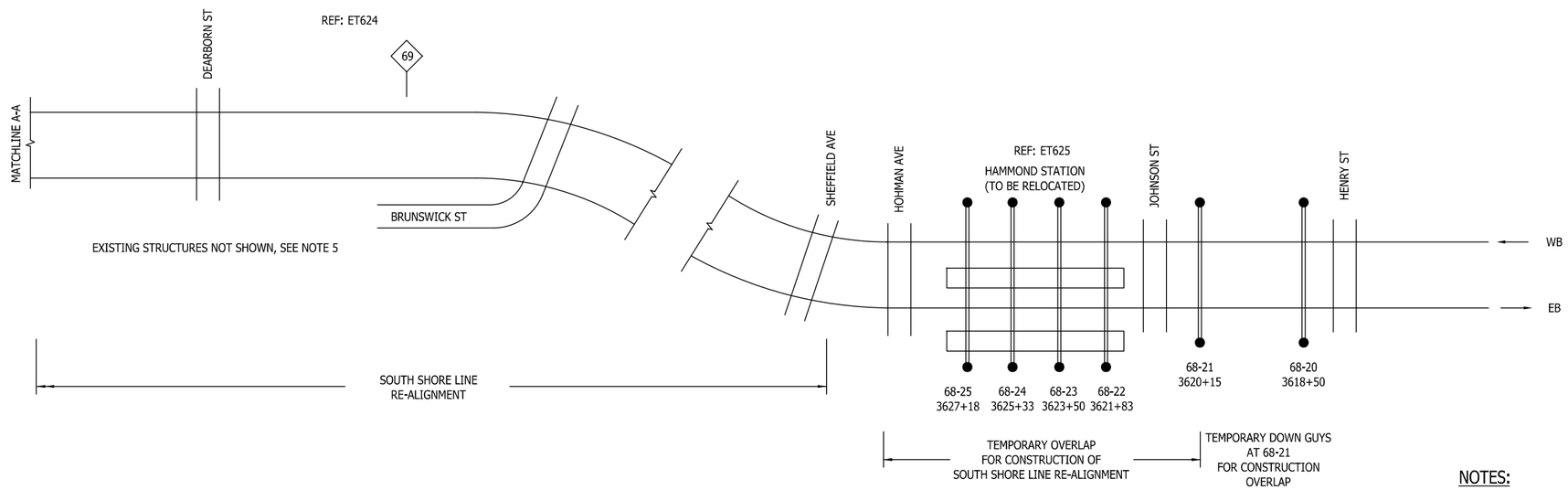

NOTES:

1. REPLACE CATENARY ON EB TRACK FROM FIXED TERMINATION AT STRUCTURE 69-26 (673+58) TO FUTURE SPLICE LOCATION NEAR 68-25 (3627+18).

2. REPLACE CATENARY ON WB TRACK FROM FIXED TERMINATION AT STRUCTURE 69-26 (3673+56) TO FUTURE SPLICE LOCATION NEAR 68-25 (3627+18).

3. INSTALL TEMPORARY DOWN GUYS NEAR 68-21 FOR CONSTRUCTION OVERLAPS ON EAST END.

4. REFERENCE DRAWINGS ARE FROM NICTD SOUTH SHORE LINE.

5. SOME STRUCTURES ARE OMITTED FOR CLARITY. SEE REFERENCE DRAWINGS FOR EXISTING DESIGN.

NOT FOR CONSTRUCTION

SERIES SYSPL-38 OF SYSPL-38

JKJELLMA

7/19/2017 9:22:42 PM

PLOT DATE:

HDR Engineering, Inc.
8550 W Bryn Mawr Ave., Suite 900
Chicago, IL 60631

www.hdrinc.com

Burns
BURNS ENGINEERING, INC. | 215 979-7700
TWO COMMERCE SQUARE, 2001 MARKET ST, SUITE 600
PHILADELPHIA, PA 19103

ISSUE	DATE	DESCRIPTION

NICTD
NORTHERN INDIANA COMMUTER TRANSPORTATION DISTRICT
33 East Highway 12
Chesterton, Indiana 46304

WEST LAKE CORRIDOR
DYER TO HAMMOND, INDIANA

DESIGNED:	RSW
DRAWN:	MJA
CHECKED:	MP
DATE:	07/21/17

NICTD - WEST LAKE CORRIDOR - MP WL 61.38 TO WL 69.18
SINGLE TRACK

SSL STAGING SYSTEM

FILENAME	SHT_WL_OCS_PL_137.dgn	SHEET 52 OF 248
SCALE	AS NOTED	

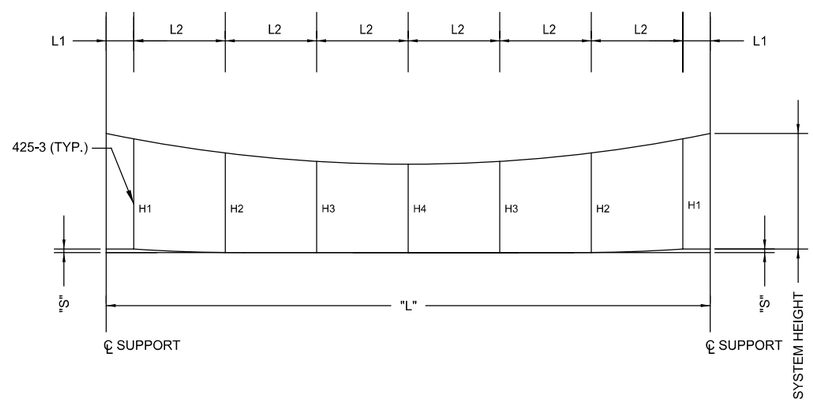

CATENARY HANGER (AT)

210-XXX
N.T.S.

HANGER LENGTHS
SIMPLE CATENARY AUTO-TENSIONED

SPAN "L" (FT)	NO. OF HANGERS	SYSTEM HEIGHT	HANGER SPACING		TROLLEY PRE SAG. S	HANGER LENGTHS			
			L1	L2		H1	H2	H3	H4
220	8	3'-6"	13'-9"	27'-6"	2"	2'-11 1/4"	2'-2 1/4"	1'-8 1/2"	1'-5 1/2"
215			13'-5 1/4"	26'-10 1/2"	2"	2'-11 1/2"	2'-3 1/4"	1'-9 1/2"	1'-6 3/4"
210			13'-1 1/2"	26'-3"	2"	2'-11 3/4"	2'-4"	1'-10 3/4"	1'-8"
205			12'-11 1/2"	25'-7"	2"	3'-0"	2'-4 3/4"	1'-11 3/4"	1'-9 1/4"
200			12'-0"	25'-1 3/4"	2"	3'-0 1/2"	2'-5 1/2"	2'-0 3/4"	1'-10 1/2"
195	7	3'-0"	13'-9"	27'-11"	2"	2'-6"	1'-11"	1'-6 3/4"	1'-5 1/4"
190			13'-6"	27'-2"	2"	2'-6 1/4"	1'-11 3/4"	1'-7 3/4"	1'-6 1/2"
185			13'-0"	26'-6"	2"	2'-6 3/4"	2'-0 1/2"	1'-8 3/4"	1'-7 1/2"
180			12'-10 1/2"	25'-8 1/2"	1"	2'-6 3/4"	2'-0"	1'-8"	1'-6 3/4"
175			12'-6"	25'-0"	1"	2'-7 1/4"	2'-0 3/4"	1'-9"	1'-7 3/4"
170			12'-0"	24'-4"	1"	2'-7 1/2"	2'-1 1/2"	1'-10"	1'-8 3/4"
165	6		13'-9"	27'-6"	1"	2'-7"	2'-1"	1'-10 1/4"	
160			13'-4"	26'-8"	1"	2'-7 1/4"	2'-1 3/4"	1'-11"	
155			12'-11"	25'-10"	1"	2'-7 1/2"	2'-2 1/2"	2'-0"	
150			12'-6"	25'-0"	1"	2'-8"	2'-3 1/4"	2'-0 3/4"	
145			12'-1"	24'-2"	1"	2'-8 1/4"	2'-3 3/4"	2'-1 3/4"	
140	5		14'-0"	28'-0"	1"	2'-7 3/4"	2'-3 3/4"	2'-2 1/4"	
135			13'-6"	27'-0"	1"	2'-8"	2'-4 1/4"	2'-3 1/4"	
130			13'-0"	26'-0"	0	2'-8 1/4"	2'-3 1/2"	2'-2"	
125			12'-6"	25'-0"	0	2'-8 3/4"	2'-4 1/4"	2'-2 3/4"	
120			12'-0"	24'-0"	0	2'-9"	2'-4 3/4"	2'-3 1/2"	
115			11'-6"	23'-0"	0	2'-9 1/4"	2'-5 1/4"	2'-4"	
110	4		13'-9"	27'-6"	0	2'-8 3/4"	2'-5 1/4"		
105			13'-0"	26'-4"	0	2'-9 1/4"	2'-5 3/4"		
100			12'-6"	25'-0"	0	2'-9 1/2"	2'-6 1/2"		
95			12'-6"	23'-4"	0	2'-9 1/2"	2'-7"		
90			11'-3"	22'-6"	0	2'-10"	2'-7 1/2"		
85	3		13'-0"	29'-6"	0	2'-9 3/4"	2'-7 3/4"		
80			13'-4"	26'-8"	0	2'-10"	2'-8 1/4"		
75			12'-0"	25'-6"	0	2'-10 1/4"	2'-8 3/4"		
70			12'-0"	23'-0"	0	2'-10 1/4"	2'-9"		
65			12'-0"	20'-6"	0	2'-10 1/2"	2'-9 1/2"		

NOTES:

1. HANGER LENGTHS ARE MEASURED FROM THE CENTER OF MESSENGER WIRE TO CENTER OF TROLLEY WIRE.

NOT FOR CONSTRUCTION

SERIES SYSDT-1 OF SYSDT-53

JKOELLMA

PLOT DATE: 7/19/2017 9:22:58 PM

HDR Engineering, Inc.
8550 W Bryn Mawr Ave., Suite 900
Chicago, IL 60631
www.hdrinc.com

Burns
BURNS ENGINEERING, INC. | 215 979-7700
TWO COMMERCE SQUARE, 2001 MARKET ST, SUITE 600
PHILADELPHIA, PA 19103

ISSUE	DATE	DESCRIPTION

NORTHERN INDIANA COMMUTER TRANSPORTATION DISTRICT
33 East Highway 12
Chesterton, Indiana 46304

WEST LAKE CORRIDOR

DYER TO HAMMOND, INDIANA

DESIGNED:	RSW
DRAWN:	MJA
CHECKED:	MP
DATE:	07/21/17

NICTD - WEST LAKE CORRIDOR - MP WL 61.38 TO WL 69.18
SINGLE TRACK

HANGER 210 SYSTEM

FILENAME	SHT_WL_OCS_DT_210.dgn	SHEET 53 OF 248
SCALE	AS NOTED	

ADJUSTMENTS TO HANGER LENGTHS

1. FOR NON-STANDARD SYSTEM HEIGHTS

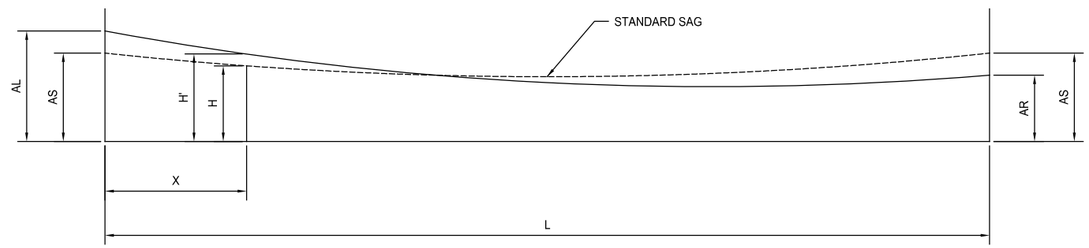

$H' = H + [(A_L - A_S) - (A_L - A_S)\ X/L]$

WHERE:
- H' = ADJUSTED HANGER (in)
- H = HANGER LENGTH (in)
- AS = STANDARD SYSTEM HEIGHT (in)
- AL = ADJUSTED SYSTEM HEIGHT (in)
- AR = ADJUSTED SYSTEM HEIGHT (in)
- X = DISTANCE TO HANGER (ft)
- L = SPAN (ft)

2. FOR POINT LOADS
(SECTION INSULATORS, ETC.)

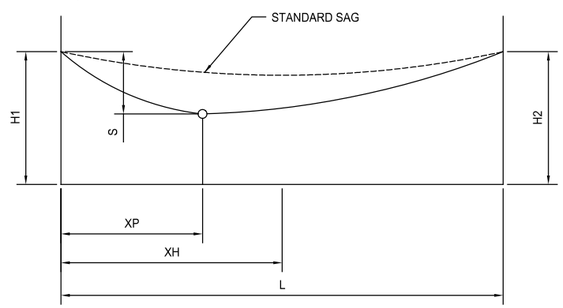

HANGER ADJUSTMENT FOR POINT LOADS

FOR XH<XP $H' = H - \frac{M(XH)(L-XP))}{(T*L)}$

FOR XH>XP $H' = H - \frac{M(XP)(L-XH))}{(T*L)}$

WHERE:
- H' = ADJUSTED HANGER (ft)
- H = HANGER LENGTH (ft)
- M = MASS OF POINT LOAD (lb)
- XP = LOCATION OF POINT LOAD (ft)
- XH = LOCATION OF HANGER (ft)
- L = SPAN LENGTH (ft)
- T = TENSION (lb)

NOT FOR CONSTRUCTION

SERIES SYSDT-2 OF SYSDT-53

JKJELLMA

PLOT DATE: 7/19/2017 9:23:17 PM

HDR Engineering, Inc.
8550 W Bryn Mawr Ave., Suite 900
Chicago, IL 60631
www.hdrinc.com

Burns
BURNS ENGINEERING, INC. | 215 979-7700
TWO COMMERCE SQUARE, 2001 MARKET ST, SUITE 600
PHILADELPHIA, PA 19103

ISSUE	DATE	DESCRIPTION

NICTD
NORTHERN INDIANA COMMUTER TRANSPORTATION DISTRICT
33 East Highway 12
Chesterton, Indiana 46304

WEST LAKE CORRIDOR
DYER TO HAMMOND, INDIANA

DESIGNED:	RSW
DRAWN:	MJA
CHECKED:	MP
DATE:	07/21/17

NICTD - WEST LAKE CORRIDOR - MP WL 61.38 TO WL 69.18
SINGLE TRACK

HANGER ADJUSTMENT SYSTEM

FILENAME: SHT_WL_OCS_DT_212.dgn
SCALE: AS NOTED

SHEET 54 OF 248

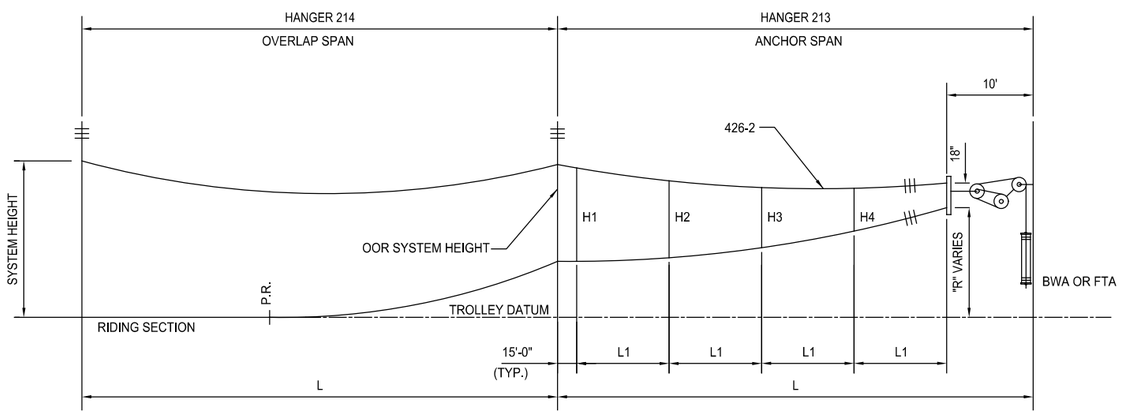

ANCHOR SPAN HANGERS

213-XXX
N.T.S.

HANGER LENGTHS - ANCHOR SPAN
SIMPLE CATENARY

SPAN "L" (FT)	NO. OF HANGER	OOR SYSTEM HEIGHT	HANGER SPACING L1	TROLLEY RISE "R"	HANGER LENGTHS			
					H1	H2	H3	H4
220	4	3'-1"	48'-9"	3'-8"	2'-10"	2'-5"	2'-2"	1'-10"
215			47'-6"	3'-8"	2'-10"	2'-5 3/4"	2'-2"	1'-10 1/4"
210			46'-3"	3'-8"	2'-10 1/4"	2'-6"	2'-2 1/4"	1'-10 1/4"
205			45'-0"	3'-8"	2'-10 1/4"	2'-6 1/4"	2'-2 1/2"	1'-10 1/4"
200			43'-9"	3'-8"	2'-10 1/2"	2'-6 1/2"	2'-2 1/2"	1'-10 1/2"
195			42'-6"	3'-8"	2'-10 1/2"	2'-6 3/4"	2'-2 3/4"	1'-10 1/2"
190		3'-2"	41'-3"	3'-5"	2'-11 1/2"	2'-7 1/2"	2'-3 1/4"	1'-10 3/4"
185			40'-0"	3'-5"	3'-0"	2'-7 1/2"	2'-3 1/4"	1'-10 3/4"
180		3'-4"	38'-9"	2'-2"	3'-2"	2'-8 3/4"	2'-4 1/4"	1'-11 1/4"
175			37'-6"	2'-2"	3'-2"	2'-9"	2'-4 1/4"	1'-11 1/4"
170			36'-3"	1'-11"	3'-2 1/4"	2'-8 3/4"	2'-4"	1'-11 1/4"
165			35'-0"	1'-11"	3'-2 1/4"	2'-8 1/2"	2'-4"	1'-11"
160			33'-9"	1'-11"	3'-2 1/2"	2'-8 1/4"	2'-3 3/4"	1'-11"
155	3		43'-4"	1'-11"	3'-2 1/2"	2'-6 1/2"	2'-0 1/2"	
150			41'-8"	1'-11"	3'-2 3/4"	2'-6 1/4"	2'-0 1/4"	
145			40'-0"	1'-11"	3'-2 3/4"	2'-6"	2'-0"	
140			38'-4"	1'-11"	3'-3"	2'-6"	2'-0"	
135			36'-8"	1'-7"	3'-3"	2'-5 1/4"	1'-11 3/4"	
130			35'-0"	1'-7"	3'-3 1/4"	2'-4 3/4"	1'-11 1/2"	
125			33'-4"	1'-7"	3'-3 1/2"	2'-4 1/4"	1'-11 1/4"	
120			31'-8"	1'-6"	3'-3 1/2"	1'-3 3/4"	1'-11"	

NOTES:

1. FOR HANGER LENGTH ADJUSTMENTS ON NON-STANDARD SYSTEM HEIGHTS SEE DRAWING SYSDET-2.
2. WHEN ADJUSTING HANGER LENGTHS FOR BWA D.E. SPANS, USE L-10' AS THE SPAN LENGTH (L) FOR THE ADJUSTMENT FORMULA CALCULATION.
3. THE TROLLEY WIRE RISE (R) IS USED FOR ALL DEAD END SPANS.
4. HANGER LENGTHS ARE MEASURED FROM THE CENTER OF TROLLEY WIRE TO THE CENTER OF MESSENGER WIRE.
5. P.R. IS THE POINT OF RISE.
6. XXX IN THE ASSEMBLY NUMBER EQUALS THE SPAN LENGTH.

NOT FOR CONSTRUCTION

SERIES SYSDT-3 OF SYSDT-53

JKJELLMA

PLOT DATE: 7/19/2017 9:23:39 PM

HDR Engineering, Inc.
8550 W Bryn Mawr Ave., Suite 900
Chicago, IL 60631
www.hdrinc.com

Burns
BURNS ENGINEERING, INC. | 215 979-7700
TWO COMMERCE SQUARE, 2001 MARKET ST, SUITE 600
PHILADELPHIA, PA 19103

ISSUE	DATE	DESCRIPTION

NICTD
NORTHERN INDIANA COMMUTER TRANSPORTATION DISTRICT
33 East Highway 12
Chesterton, Indiana 46304

WEST LAKE CORRIDOR
DYER TO HAMMOND, INDIANA

DESIGNED: RSW
DRAWN: MJA
CHECKED: MP
DATE: 07/21/17

NICTD - WEST LAKE CORRIDOR - MP WL 61.38 TO WL 69.18
SINGLE TRACK

HANGER 213
SYSTEM

FILENAME SHT_WL_OCS_DT_213.dgn
SCALE AS NOTED
SHEET 55 OF 248

HANGER LENGTHS-OVERLAP SPANS (UNINSULATED)
SIMPLE CATENARY

SPAN "L" (FT)	NO. OF HANGERS	SYSTEM HEIGHT	HANGER SPACING				TROLLEY RISE "R"	OOR SYSTEM HEIGHT	HANGER LENGTHS							
			L1	L2	L3	L4			H1	H2	H3	H4	H5	H6	H7	H8
220			15'-0" (1)	27'-0" (6)	38'-0" (1)	5'-0"	11"		2'-11 1/2"	2'-3 1/4"	1'-10 1/2"	1'-9 1/4"	1'-11 1/2"	2'-2 3/4"	2'-5 3/4"	2'-10"
215			15'-0" (1)	27'-0" (6)	33'-0" (1)	5'-0"	11"		2'-11 1/2"	2'-3 1/2"	1'-11"	1'-9 3/4"	2'-0 1/4"	2'-3 1/4"	2'-6 1/2"	2'-10"
210	8	3'-6"	15'-0" (1)	25'-0" (6)	40'-0" (1)	5'-0"	11"		2'-11 3/4"	2'-4 1/2"	2'-0 1/4"	1'-11"	2'-0 1/2"	2'-3 1/4"	2'-6"	2'-10"
205			15'-0" (1)	23'-0" (6)	47'-0" (1)	5'-0"	11"	3'-1"	3'-0"	2'-5 1/2"	2'-1 3/4"	2'-0 1/2"	2'-1 3/4"	2'-4"	2'-6"	2'-10 1/4"
200			15'-0" (1)	23'-0" (6)	42'-0" (1)	5'-0"	11"		3'-0 1/4"	2'-6"	2'-2 1/2"	2'-1 1/2"	2'-3"	2'-5"	2'-6 3/4"	2'-10 1/4"
195			15'-0" (1)	28'-0" (5)	35'-0" (1)	5'-0"	11"		2'-6 1/2"	2'-0 1/2"	1'-10"	1'-11 1/4"	2'-2 3/4"	2'-6"	2'-10 1/4"	
190			15'-0" (1)	28'-0" (5)	30'-0" (1)	5'-0"	10"	3'-2"	2'-7"	2'-1 1/4"	1'-11 1/2"	2'-1 1/2"	2'-5 1/2"	2'-9 1/2"	3'-2"	
185			15'-0" (1)	27'-0" (5)	30'-0" (1)	5'-0"	10"		2'-7"	2'-1 3/4"	2'-0"	2'-1 3/4"	2'-4 3/4"	2'-8"	2'-11 1/4"	
180	7	3'-0"	15'-0" (1)	26'-0" (5)	30'-0" (1)	5'-0"	8"		2'-7 1/4"	2'-2 3/4"	2'-1 1/4"	2'-3"	2'-6 1/2"	2'-9 3/4"	3'-1 1/4"	
175			15'-0" (1)	25'-0" (5)	30'-0" (1)	5'-0"	8"	3'-4"	2'-7 1/2"	2'-3 1/4"	2'-2 1/4"	2'-4"	2'-7"	2'-10"	3'-1 1/4"	
170			15'-0" (1)	24'-0" (5)	30'-0" (1)	5'-0"	8"		2'-8"	2'-4 1/2"	2'-3 3/4"	2'-5 3/4"	2'-9 1/4"	3'-0 1/4"	3'-4"	
165			15'-0" (1)	24'-0" (5)	25'-0" (1)	5'-0"	8"		2'-8 1/4"	2'-5"	2'-4 3/4"	2'-7 1/2"	2'-11 1/4"	3'-2 3/4"	3'-6 3/4"	

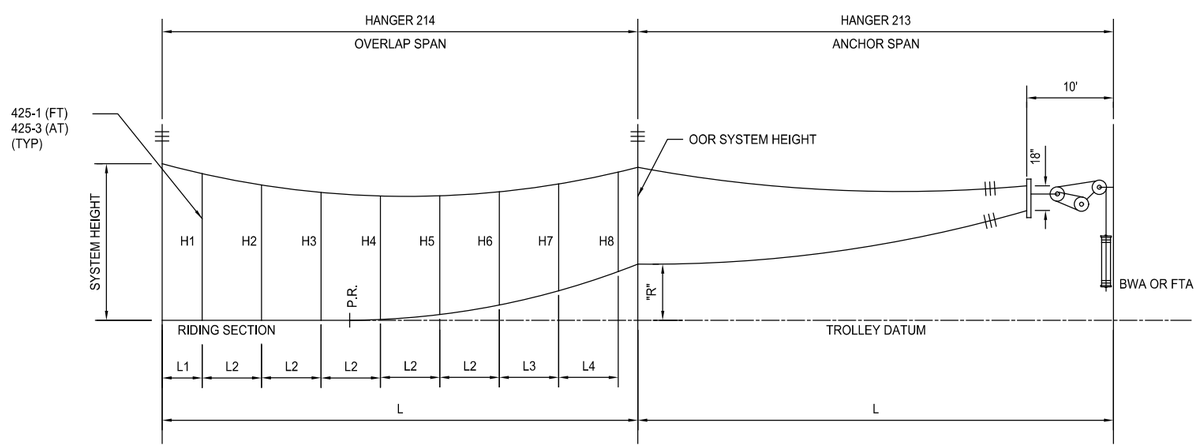

OVERLAP SPAN HANGERS

214-XXX
N.T.S.

NOTES:

1. FOR HANGER LENGTHS ON OVERLAP SPANS WITH 3'-6" SYSTEM HEIGHTS, ADD 0'-6" TO THE NORMAL 3'-0" SYSTEM HEIGHT STANDARD HANGER LENGTHS SHOWN HERE.
2. THE TROLLEY WIRE RISE (R) IS USED FOR ALL DEAD END SPANS.
3. HANGER LENGTHS ARE MEASURED FROM CENTER OF TROLLEY WIRE TO CENTER OF MESSENGER WIRE.
4. A RIGID ANTI-TORSIONAL HANGER IS REQUIRED ONLY WHERE UNTWISTING TORQUE FROM STRANDED WIRE MAY DAMAGE STRAIN INSULATOR.
5. XXX IN THE ASSEMBLY NUMBER EQUALS THE SPAN LENGTH.

NOT FOR CONSTRUCTION

SERIES SYSDT-4 OF SYSDT-53

JKIELLMA

PLOT DATE: 7/19/2017 9:23:54 PM

HDR Engineering, Inc.
8550 W Bryn Mawr Ave., Suite 900
Chicago, IL 60631
www.hdrinc.com

Burns
BURNS ENGINEERING, INC. | 215 979-7700
TWO COMMERCE SQUARE, 2001 MARKET ST, SUITE 600
PHILADELPHIA, PA 19103

ISSUE	DATE	DESCRIPTION

NICTD
NORTHERN INDIANA COMMUTER TRANSPORTATION DISTRICT
33 East Highway 12
Chesterton, Indiana 46304

WEST LAKE CORRIDOR
DYER TO HAMMOND, INDIANA

DESIGNED:	RSW
DRAWN:	MJA
CHECKED:	MP
DATE:	07/21/17

NICTD - WEST LAKE CORRIDOR - MP WL 61.38 TO WL 69.18
SINGLE TRACK

HANGER 214 SYSTEM

FILENAME	SHT_WL_OCS_DT_214.dgn	SHEET 56 OF 248
SCALE	AS NOTED	

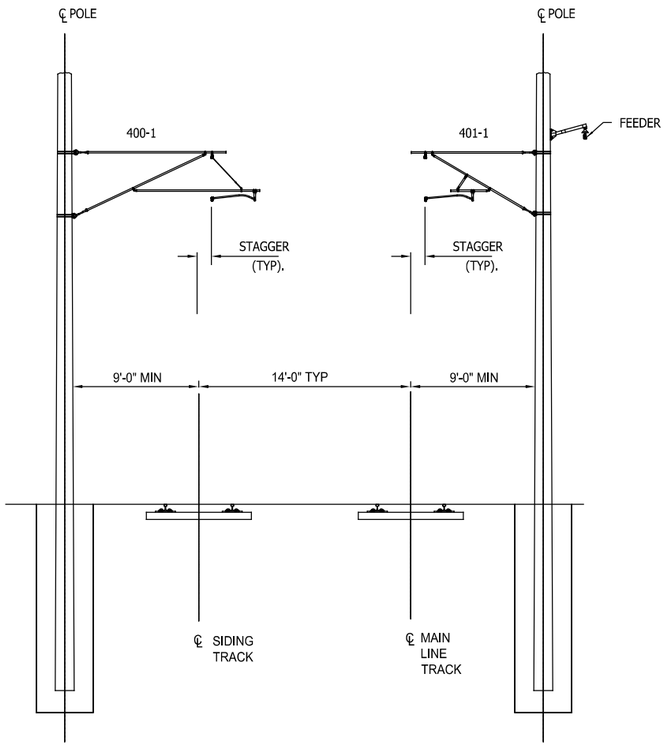

SIDING TRACK SIDE POLES

N.T.S

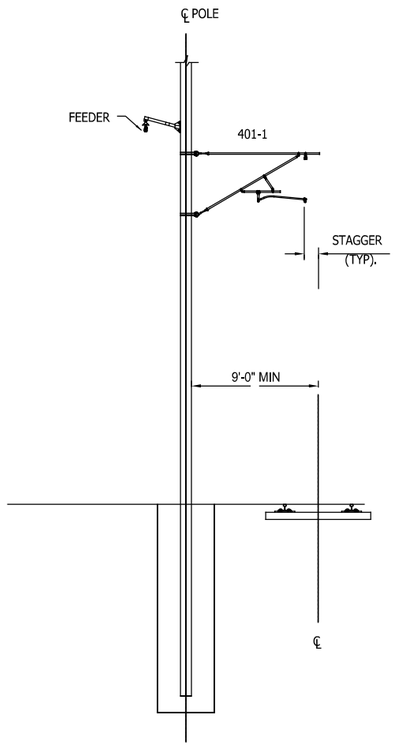

SIDE POLE

N.T.S

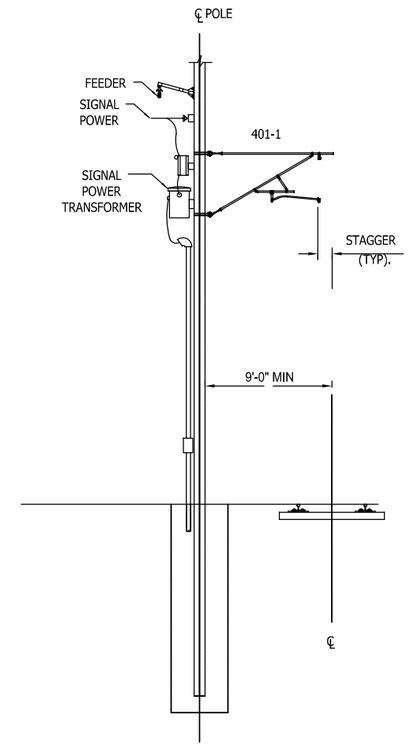

SIDE POLE WITH
SIGNAL POWER
TRANSFORMER

N.T.S

NOT FOR CONSTRUCTION

SERIES SYSDT-5 OF SYSDT-53

JKJELLMA

7/19/2017
9:24:10 PM

PLOT DATE:

HDR Engineering, Inc.
8550 W Bryn Mawr Ave., Suite 900
Chicago, IL 60631

www.hdrinc.com

Burns

BURNS ENGINEERING, INC. | 215 979-7700
TWO COMMERCE SQUARE, 2001 MARKET ST, SUITE 600
PHILADELPHIA, PA 19103

ISSUE	DATE	DESCRIPTION

NICTD

NORTHERN INDIANA COMMUTER
TRANSPORTATION DISTRICT
33 East Highway 12
Chesterton, Indiana 46304

WEST LAKE CORRIDOR

DYER TO HAMMOND, INDIANA

DESIGNED:	RSW
DRAWN:	MJA
CHECKED:	MP
DATE:	07/21/17

NICTD - WEST LAKE CORRIDOR - MP WL 61.38 TO WL 69.18
SINGLE TRACK

CANTILEVERS SYSTEM

FILENAME	SHT_WL_OCS_DT_300.dgn
SCALE	AS NOTED

SHEET 57 OF 248

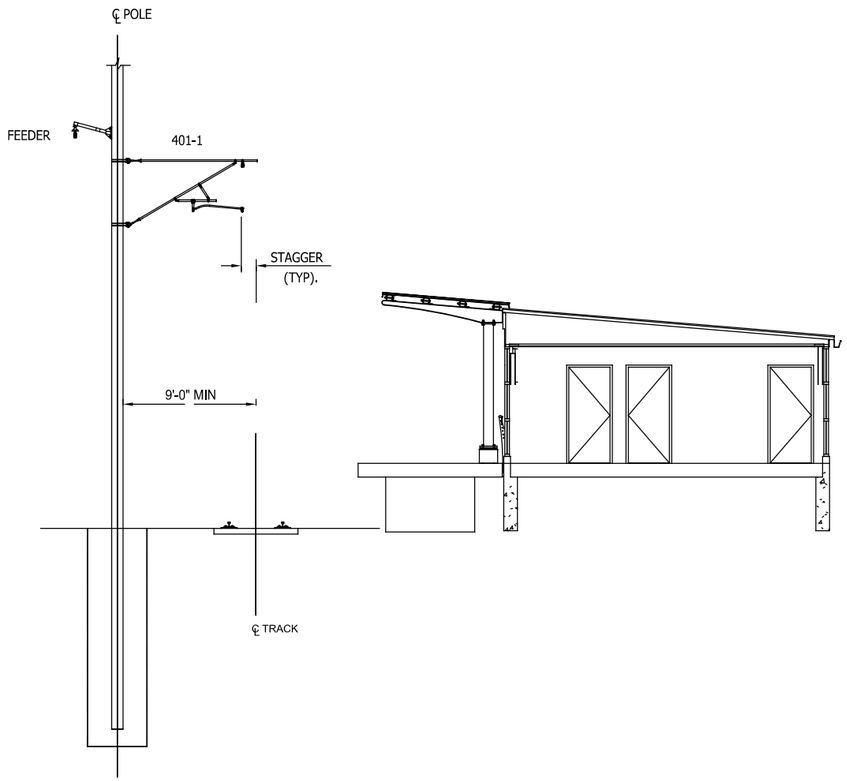

TYPICAL SECTION
AT STATION
N.T.S

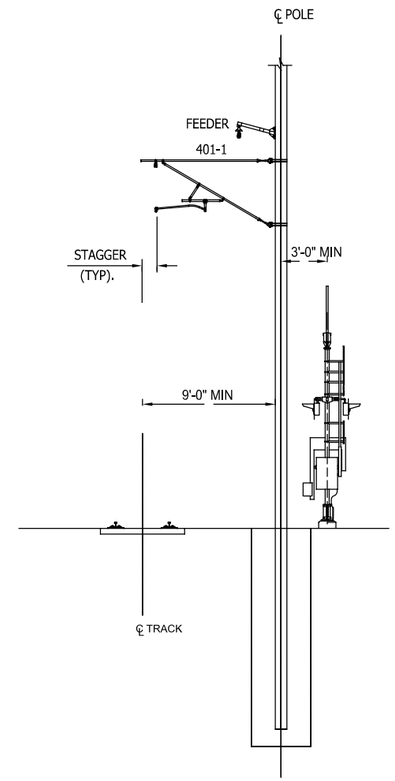

TYPICAL SECTION
AT STATION

NOT FOR CONSTRUCTION

SERIES SYSDT-6 OF SYSDT-53

JKIELLMA

7/19/2017
9:24:29 PM

PLOT DATE:

HDR Engineering, Inc.
8550 W Bryn Mawr Ave., Suite 900
Chicago, IL 60631

www.hdrinc.com

Burns
BURNS ENGINEERING, INC. | 215 979-7700
TWO COMMERCE SQUARE, 2001 MARKET ST, SUITE 600
PHILADELPHIA, PA 19103

ISSUE	DATE	DESCRIPTION

NICTD
NORTHERN INDIANA COMMUTER
TRANSPORTATION DISTRICT
33 East Highway 12
Chesterton, Indiana 46304

WEST LAKE CORRIDOR
DYER TO HAMMOND, INDIANA

DESIGNED:	RSW
DRAWN:	MJA
CHECKED:	MP
DATE:	07/21/17

NICTD - WEST LAKE CORRIDOR - MP WL 61.38 TO WL 69.18
SINGLE TRACK

STATION CANTILEVER SYSTEM

FILENAME	SHT_WL_OCS_DT_301.dgn
SCALE	AS NOTED

SHEET **58 OF 248**

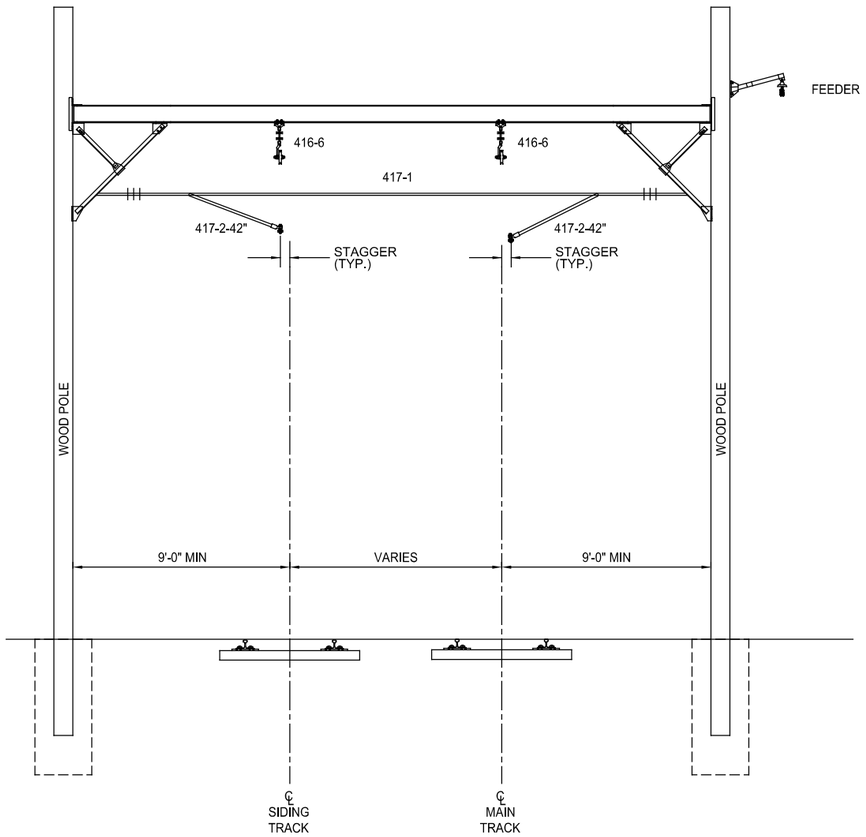

DOUBLE TRACK BEAM WITH WOOD POLES

N.T.S.

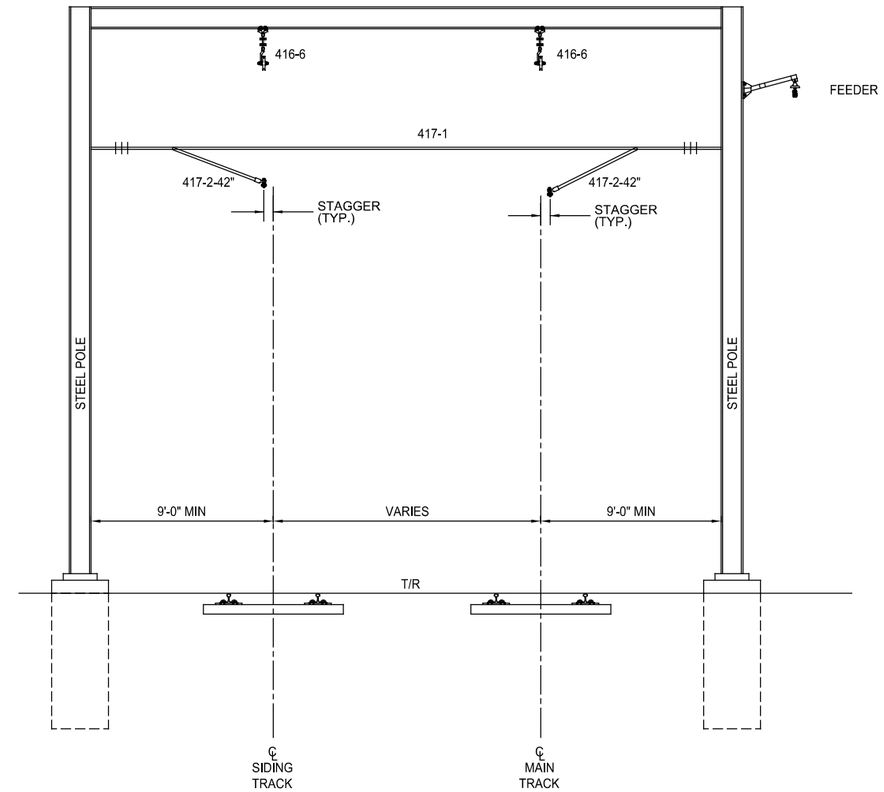

DOUBLE TRACK BEAM WITH STEEL POLES

N.T.S.

JKOELLMA

PLOT DATE: 7/19/2017 9:24:41 PM

HDR Engineering, Inc.
8550 W Bryn Mawr Ave., Suite 900
Chicago, IL 60631

www.hdrinc.com

Burns

BURNS ENGINEERING, INC. | 215 979-7700
TWO COMMERCE SQUARE, 2001 MARKET ST, SUITE 600
PHILADELPHIA, PA 19103

ISSUE	DATE	DESCRIPTION

NORTHERN INDIANA COMMUTER TRANSPORTATION DISTRICT
33 East Highway 12
Chesterton, Indiana 46304

WEST LAKE CORRIDOR

DYER TO HAMMOND, INDIANA

DESIGNED: RSW
DRAWN: MJA
CHECKED: MP
DATE: 07/21/17

NOT FOR CONSTRUCTION

SERIES SYSDT-7 OF SYSDT-53

NICTD - WEST LAKE CORRIDOR - MP WL 61.38 TO WL 69.18
SINGLE TRACK

PORTALS SYSTEM

FILENAME: SHT_WL_OCS_DT_302.dgn
SCALE: AS NOTED

SHEET **59 OF 248**

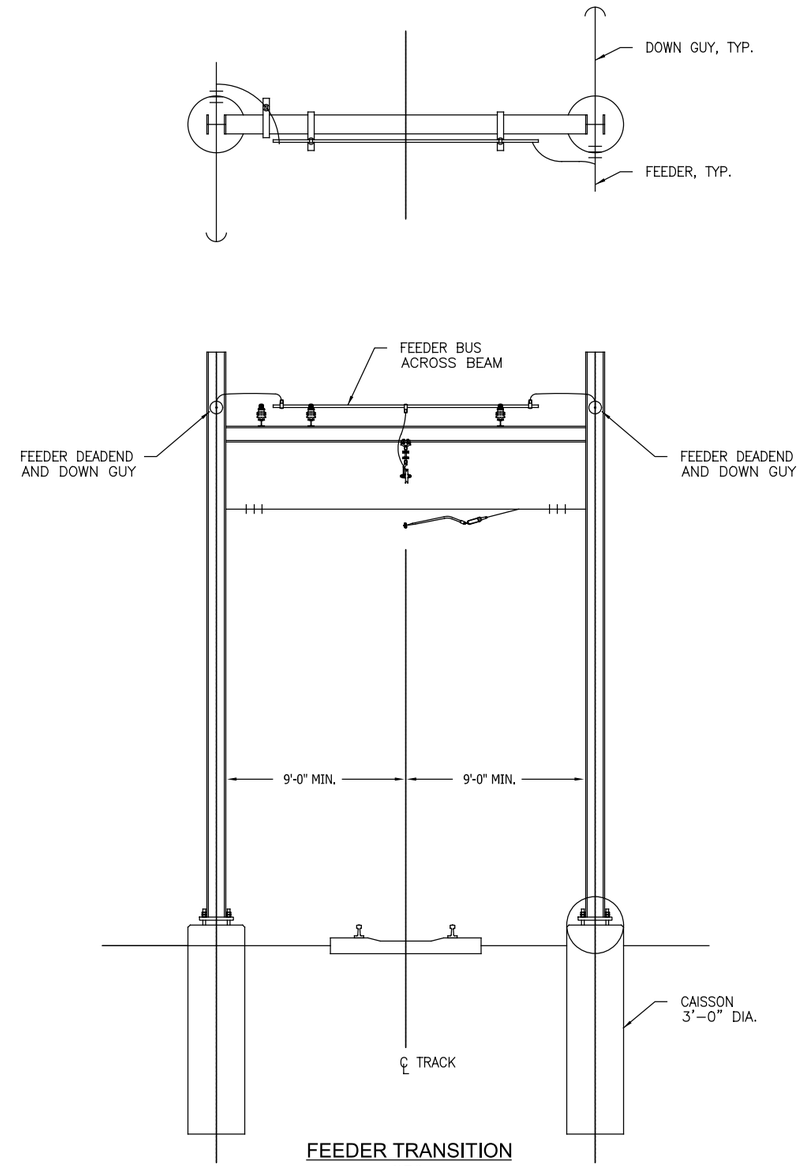

FEEDER TRANSITION

N.T.S

NOT FOR CONSTRUCTION

SERIES SYSDT-8 OF SYSDT-53

JKIELLMA

PLOT DATE: 7/19/2017 9:24:56 PM

HDR Engineering, Inc.
8550 W Bryn Mawr Ave., Suite 900
Chicago, IL 60631

www.hdrinc.com

Burns

BURNS ENGINEERING, INC. | 215 979-7700
TWO COMMERCE SQUARE, 2001 MARKET ST, SUITE 600
PHILADELPHIA, PA 19103

ISSUE	DATE	DESCRIPTION

NICTD
NORTHERN INDIANA COMMUTER
TRANSPORTATION DISTRICT
33 East Highway 12
Chesterton, Indiana 46304

WEST LAKE CORRIDOR

DYER TO HAMMOND, INDIANA

DESIGNED:	RSW
DRAWN:	MJA
CHECKED:	MP
DATE:	07/21/17

NICTD - WEST LAKE CORRIDOR - MP WL 61.38 TO WL 69.18
SINGLE TRACK

FEEDER PORTAL SYSTEM

FILENAME	SHT_WL_OCS_DT_303.dgn
SCALE	AS NOTED

SHEET **60 OF 248**

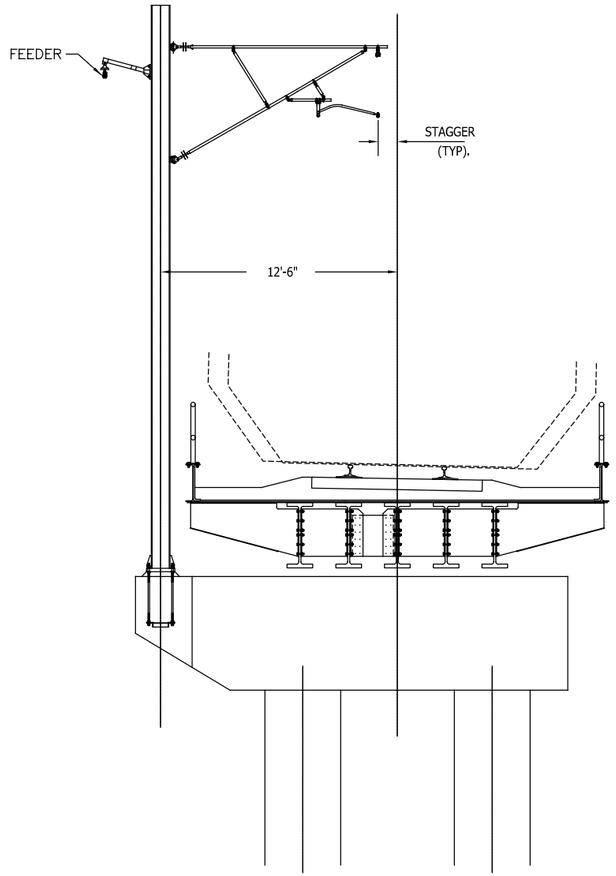

AERIAL SIDE POLE
N.T.S

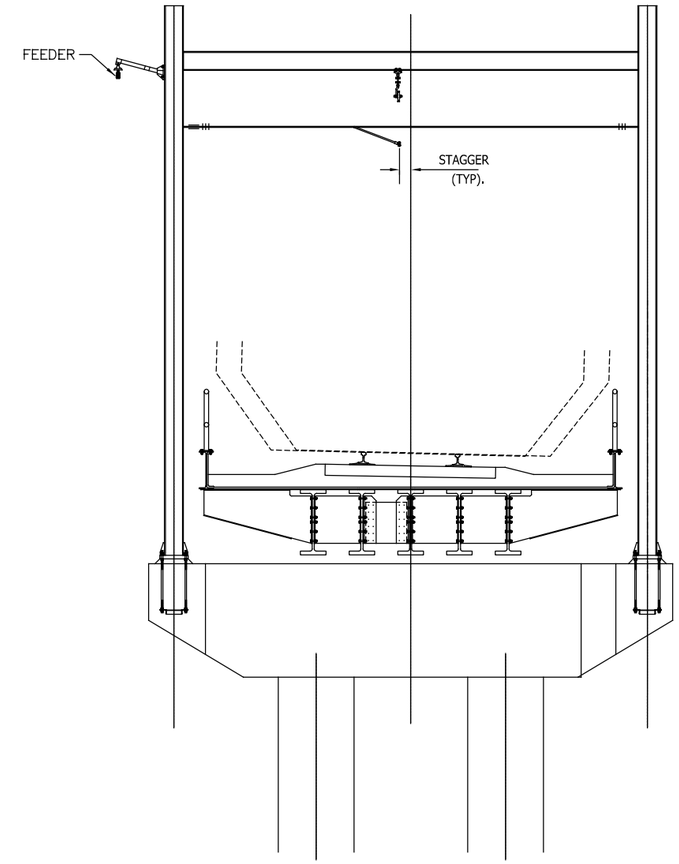

AERIAL PORTAL
N.T.S

NOT FOR CONSTRUCTION

SERIES SYSDT-9 OF SYSDT-53

JKIELLMA

PLOT DATE: 7/19/2017 9:25:14 PM

HDR Engineering, Inc.
8550 W Bryn Mawr Ave., Suite 900
Chicago, IL 60631
www.hdrinc.com

Burns
BURNS ENGINEERING, INC. | 215 979-7700
TWO COMMERCE SQUARE, 2001 MARKET ST, SUITE 600
PHILADELPHIA, PA 19103

ISSUE	DATE	DESCRIPTION

NICTD
NORTHERN INDIANA COMMUTER TRANSPORTATION DISTRICT
33 East Highway 12
Chesterton, Indiana 46304

WEST LAKE CORRIDOR
DYER TO HAMMOND, INDIANA

DESIGNED:	RSW
DRAWN:	MJA
CHECKED:	MP
DATE:	07/21/17

NICTD - WEST LAKE CORRIDOR - MP WL 61.38 TO WL 69.18
SINGLE TRACK

AERIAL CANTILEVER SYSTEM

FILENAME	SHT_WL_OCS_DT_304.dgn
SCALE	AS NOTED

SHEET 61 OF 248

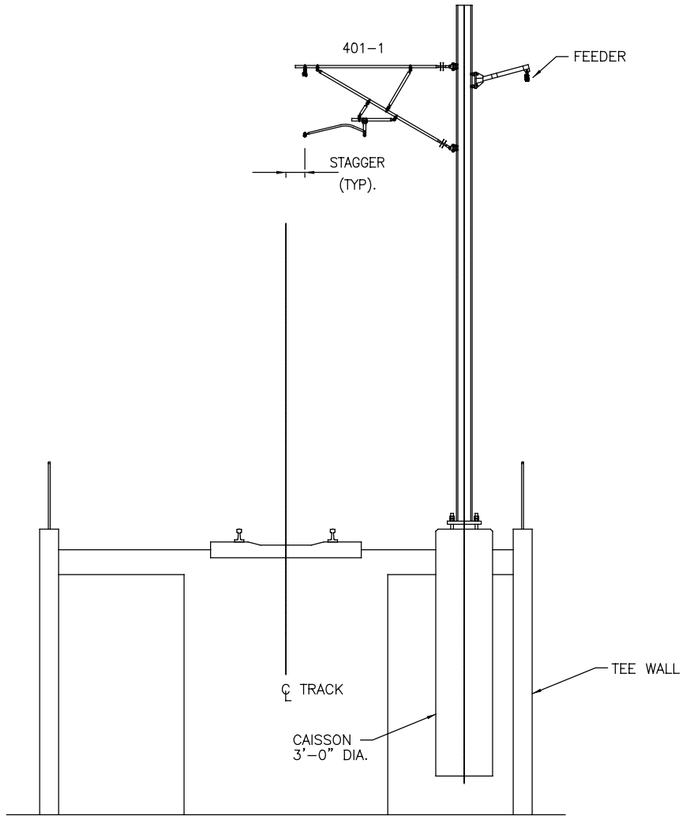

RETAINING WALL SIDE POLE

N.T.S

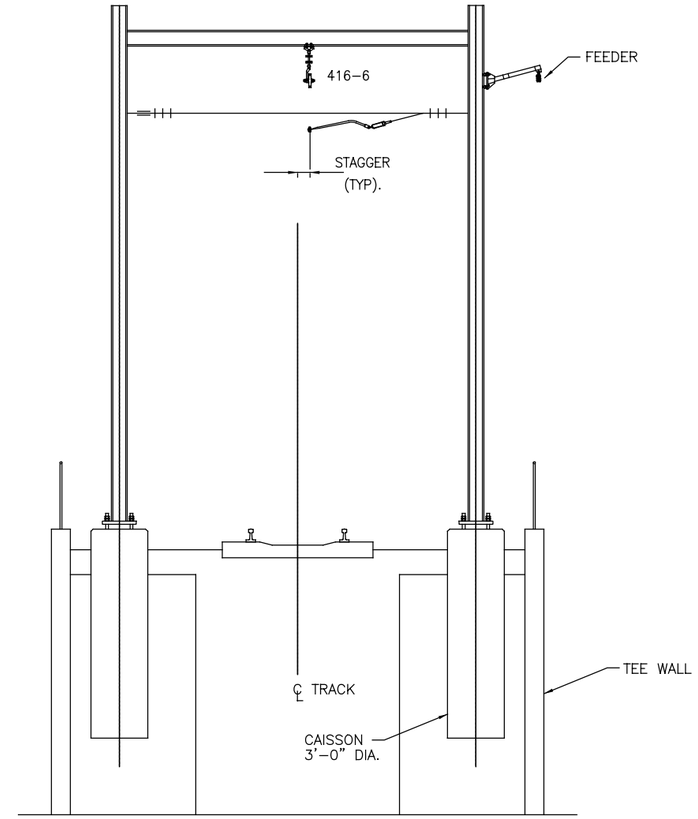

RETAINING WALL PORTAL

N.T.S

NOT FOR CONSTRUCTION

SERIES SYSDT-10 OF SYSDT-53

JKOELLMA

PLOT DATE: 7/19/2017 9:25:30 PM

HDR Engineering, Inc.
8550 W Bryn Mawr Ave., Suite 900
Chicago, IL 60631

www.hdrinc.com

Burns

BURNS ENGINEERING, INC. | 215 979-7700
TWO COMMERCE SQUARE, 2001 MARKET ST, SUITE 600
PHILADELPHIA, PA 19103

ISSUE	DATE	DESCRIPTION

NICTD

NORTHERN INDIANA COMMUTER TRANSPORTATION DISTRICT
33 East Highway 12
Chesterton, Indiana 46304

WEST LAKE CORRIDOR

DYER TO HAMMOND, INDIANA

DESIGNED:	RSW
DRAWN:	MJA
CHECKED:	MP
DATE:	07/21/17

NICTD - WEST LAKE CORRIDOR - MP WL 61.38 TO WL 69.18
SINGLE TRACK

RETAINING WALL SECTION SYSTEM

FILENAME	SHT_WL_OCS_DT_305.dgn	SHEET 62 OF 248
SCALE	AS NOTED	

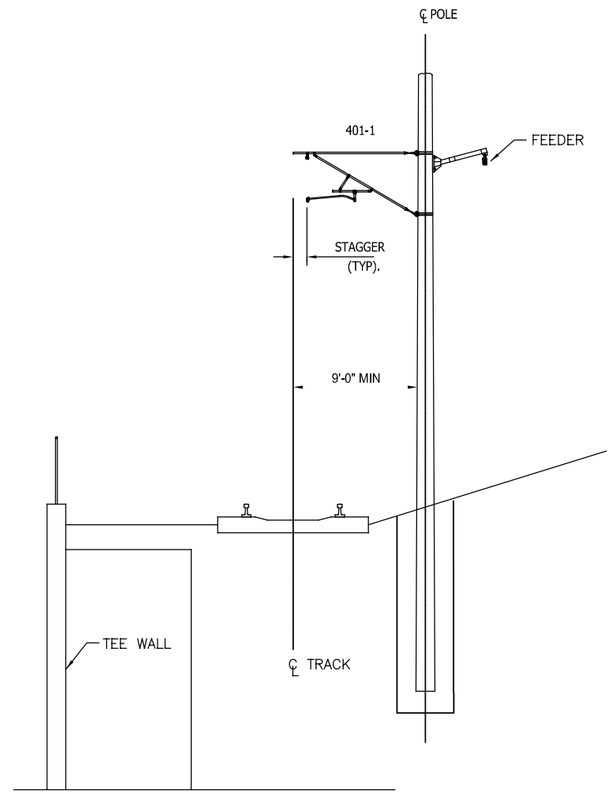

WOOD POLE OPPOSITE
RETAINING WALL
N.T.S

NOT FOR CONSTRUCTION

SERIES SYSDT-11 OF SYSDT-53

JKIELLMA

PLOT DATE: 7/19/2017 9:25:44 PM

HDR Engineering, Inc.
8550 W Bryn Mawr Ave., Suite 900
Chicago, IL 60631

www.hdrinc.com

Burns
BURNS ENGINEERING, INC. | 215 979-7700
TWO COMMERCE SQUARE, 2001 MARKET ST, SUITE 600
PHILADELPHIA, PA 19103

ISSUE	DATE	DESCRIPTION

NICTD
NORTHERN INDIANA COMMUTER
TRANSPORTATION DISTRICT
33 East Highway 12
Chesterton, Indiana 46304

WEST LAKE CORRIDOR
DYER TO HAMMOND, INDIANA

DESIGNED:	RSW
DRAWN:	MJA
CHECKED:	MP
DATE:	07/21/17

NICTD - WEST LAKE CORRIDOR - MP WL 61.38 TO WL 69.18
SINGLE TRACK

CANTILEVER OPPOSITE WALL SYSTEM

FILENAME	SHT_WL_OCS_DT_306.dgn
SCALE	AS NOTED

SHEET **63 OF 248**

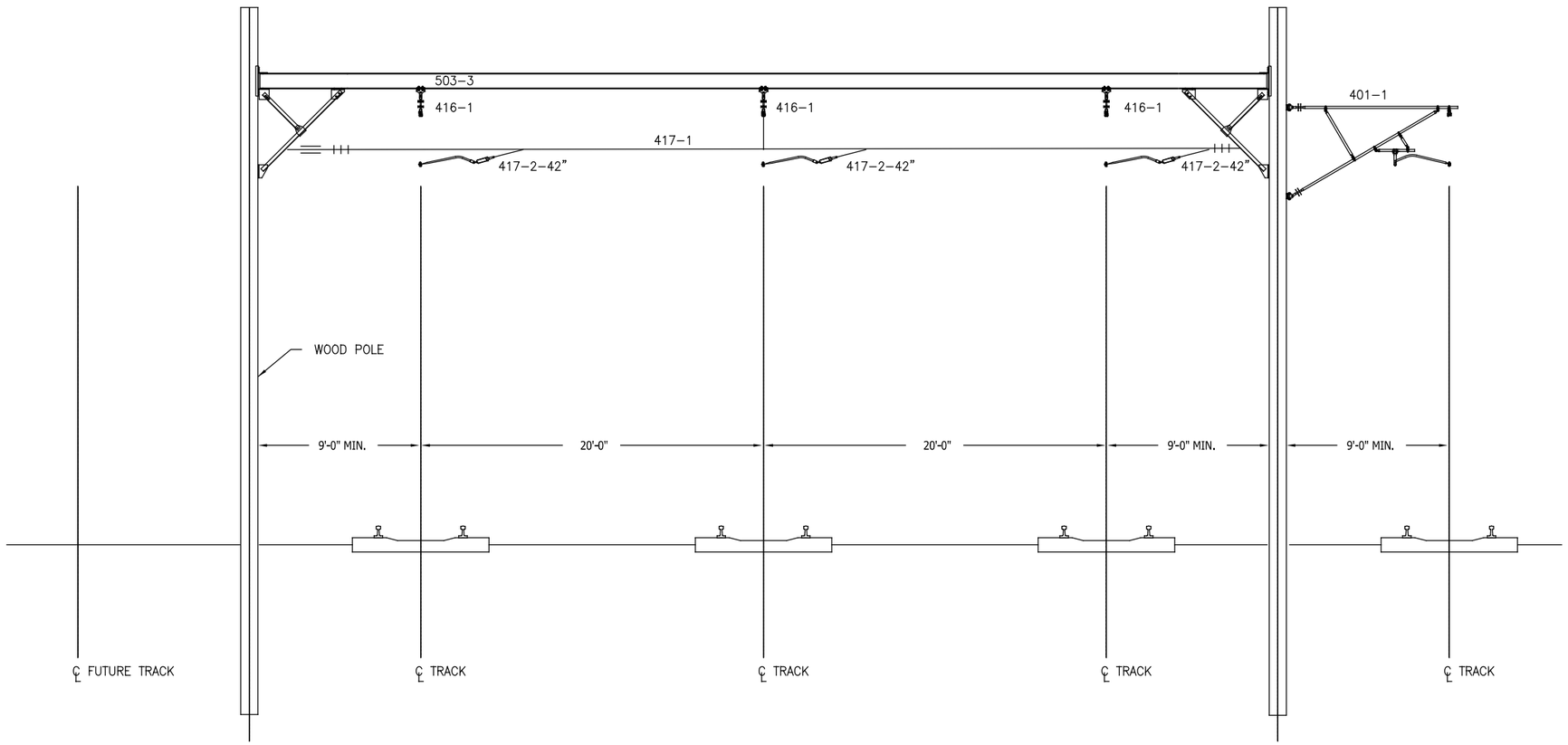

PORTAL AT LAYOVER TRACKS

N.T.S

NOT FOR CONSTRUCTION

SERIES SYSDT-12 OF SYSDT-53

JKIELLMA

PLOT DATE: 7/19/2017 9:25:57 PM

HDR Engineering, Inc.
8550 W Bryn Mawr Ave., Suite 900
Chicago, IL 60631

www.hdrinc.com

Burns

BURNS ENGINEERING, INC. | 215 979-7700
TWO COMMERCE SQUARE, 2001 MARKET ST, SUITE 600
PHILADELPHIA, PA 19103

ISSUE	DATE	DESCRIPTION

NICTD
NORTHERN INDIANA COMMUTER TRANSPORTATION DISTRICT
33 East Highway 12
Chesterton, Indiana 46304

WEST LAKE CORRIDOR
DYER TO HAMMOND, INDIANA

DESIGNED:	RSW
DRAWN:	MJA
CHECKED:	MP
DATE:	07/21/17

NICTD - WEST LAKE CORRIDOR - MP WL 61.38 TO WL 69.18
SINGLE TRACK

LAYOVER YARD PORTAL SYSTEM

FILENAME	SHT_WL_OCS_DT_307.dgn
SCALE	AS NOTED

SHEET 64 OF 248

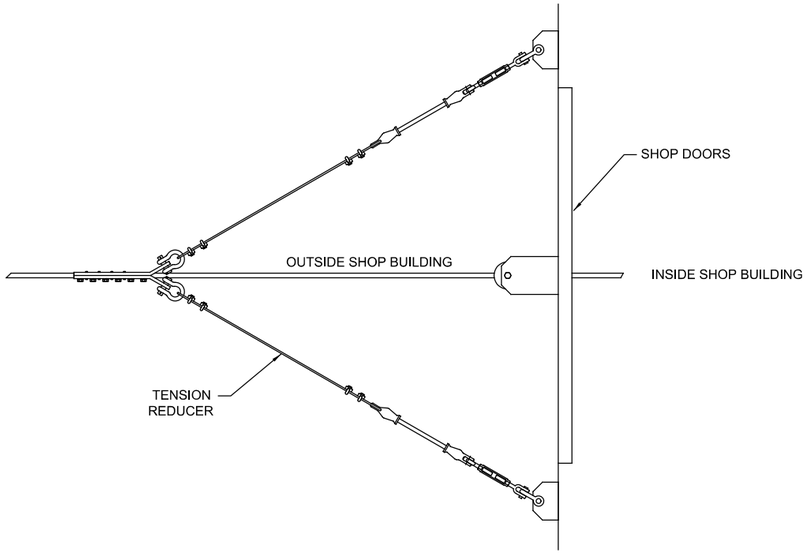

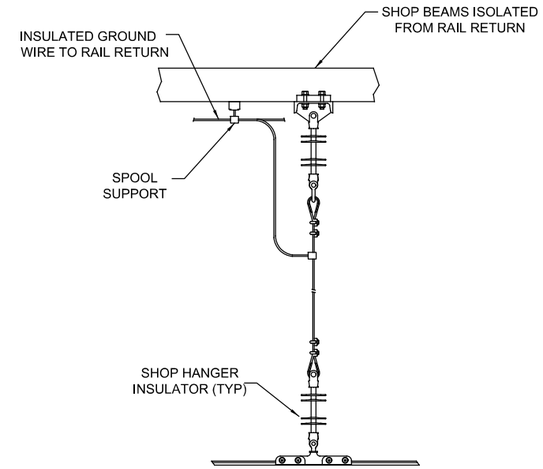

SHOP SUPPORT DETAIL

N.T.S

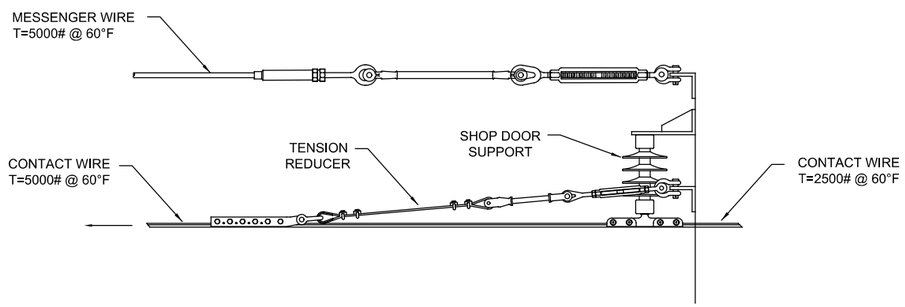

TENSION REDUCER ARRANGEMENT

N.T.S

NOTES:

1. SHOP HANGER DESIGN USES DOUBLE INSULATED BONDING WIRE TO ISOLATE BUILDING STEEL FROM RETURN RAIL. THE HANGER STRAND WIRE IS BONDED TO NEGATIVE RAIL RETURN.

NOT FOR CONSTRUCTION

SERIES SYSDT-13 OF SYSDT-53

JKIELLMA

PLOT DATE: 7/19/2017 9:26:11 PM

HDR Engineering, Inc.
8550 W Bryn Mawr Ave., Suite 900
Chicago, IL 60631

www.hdrinc.com

Burns

BURNS ENGINEERING, INC. | 215 979-7700
TWO COMMERCE SQUARE, 2001 MARKET ST, SUITE 600
PHILADELPHIA, PA 19103

ISSUE	DATE	DESCRIPTION

NICTD
NORTHERN INDIANA COMMUTER
TRANSPORTATION DISTRICT
33 East Highway 12
Chesterton, Indiana 46304

WEST LAKE CORRIDOR

DYER TO HAMMOND, INDIANA

DESIGNED:	RSW
DRAWN:	MJA
CHECKED:	MP
DATE:	07/21/17

NICTD - WEST LAKE CORRIDOR - MP WL 61.38 TO WL 69.18
SINGLE TRACK

SHOP SUPPORT SYSTEM

FILENAME	SHT_WL_OCS_DT_308.dgn	SHEET 65 OF 248
SCALE	AS NOTED	

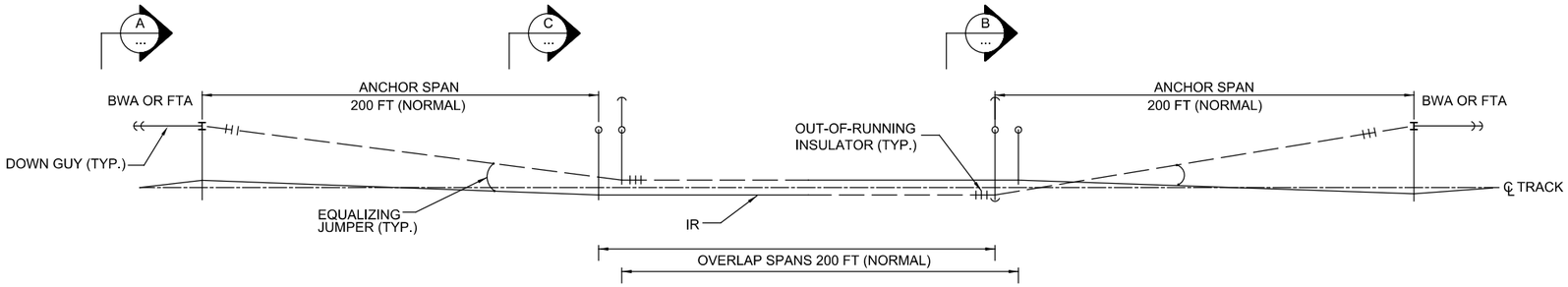

PLAN

OVERLAP
N.T.S.

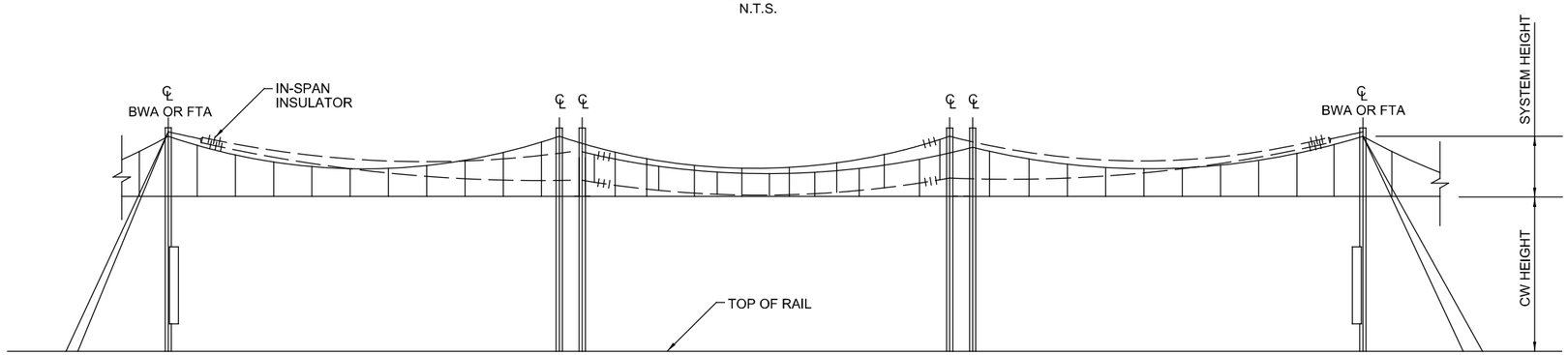

ELEVATION

N.T.S.

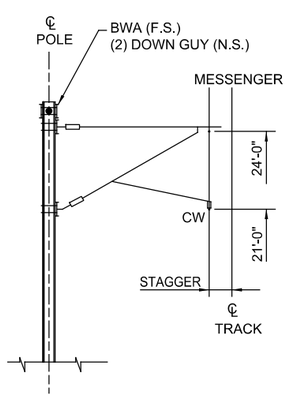

A SECTION

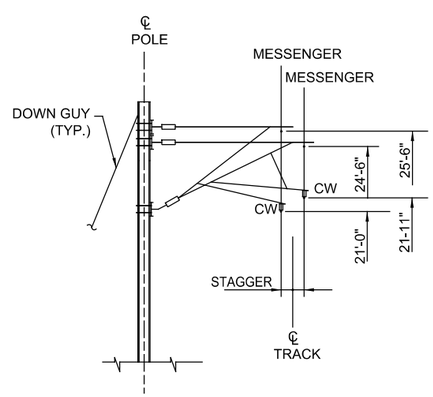

B SECTION

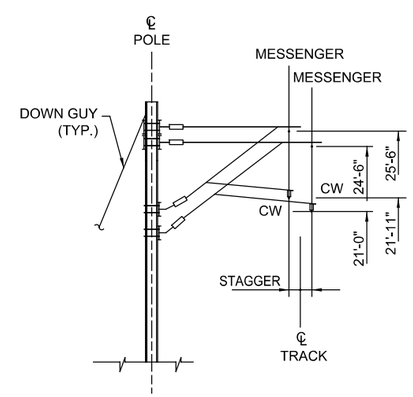

C SECTION

NOTES:

1. HEIGHTS FOR MESSENGER AND CONTACT WIRE, ARE GIVEN IN REFERENCE TO TOP OF RAIL AT EACH LOCATION.
2. CONDUCTOR HEIGHTS SHOWN ARE FOR ILLUSTRATION. FOR CONDUCTOR HEIGHTS AT EACH OVERLAP SEE CATENARY LAYOUT SHEETS.

NOT FOR CONSTRUCTION

SERIES SYSDT-14 OF SYSDT-53

JKIELLMA

PLOT DATE: 7/19/2017 9:26:25 PM

HDR Engineering, Inc.
8550 W Bryn Mawr Ave., Suite 900
Chicago, IL 60631
www.hdrinc.com

Burns
BURNS ENGINEERING, INC. | 215 979-7700
TWO COMMERCE SQUARE, 2001 MARKET ST, SUITE 600
PHILADELPHIA, PA 19103

ISSUE	DATE	DESCRIPTION

NICTD
NORTHERN INDIANA COMMUTER TRANSPORTATION DISTRICT
33 East Highway 12
Chesterton, Indiana 46304

WEST LAKE CORRIDOR
DYER TO HAMMOND, INDIANA

DESIGNED:	RSW
DRAWN:	MJA
CHECKED:	MP
DATE:	07/21/17

NICTD - WEST LAKE CORRIDOR - MP WL 61.38 TO WL 69.18
SINGLE TRACK

OVERLAP SYSTEM

FILENAME	SHT_WL_OCS_DT_310.dgn	SHEET 66 OF 248
SCALE	AS NOTED	

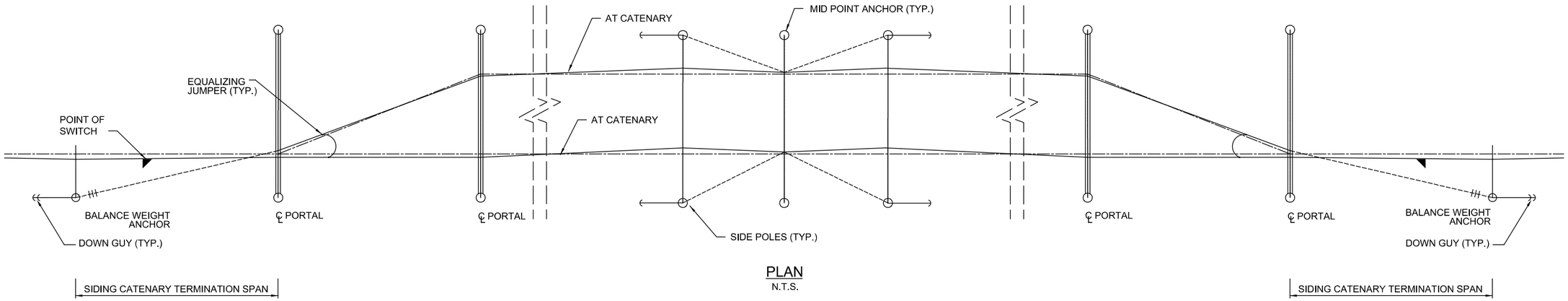

PLAN
N.T.S.

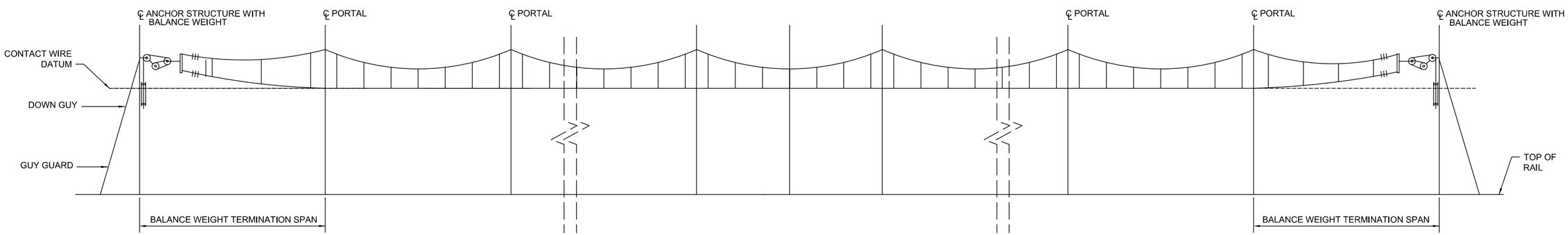

ELEVATION
SIDING CATENARY

NOT FOR CONSTRUCTION

SERIES SYSDT-15 OF SYSDT-53

JKIELLMA

PLOT DATE: 7/19/2017 9:26:36 PM

HDR Engineering, Inc.
8550 W Bryn Mawr Ave., Suite 900
Chicago, IL 60631
www.hdrinc.com

Burns
BURNS ENGINEERING, INC. | 215 979-7700
TWO COMMERCE SQUARE, 2001 MARKET ST, SUITE 600
PHILADELPHIA, PA 19103

ISSUE	DATE	DESCRIPTION

NICTD
NORTHERN INDIANA COMMUTER TRANSPORTATION DISTRICT
33 East Highway 12
Chesterton, Indiana 46304

WEST LAKE CORRIDOR
DYER TO HAMMOND, INDIANA

DESIGNED:	RSW
DRAWN:	MJA
CHECKED:	MP
DATE:	07/21/17

NICTD - WEST LAKE CORRIDOR - MP WL 61.38 TO WL 69.18
SINGLE TRACK

SIDING TRACK SYSTEM

FILENAME	SHT_WL_OCS_DT_312.dgn	SHEET 67 OF 248
SCALE	AS NOTED	

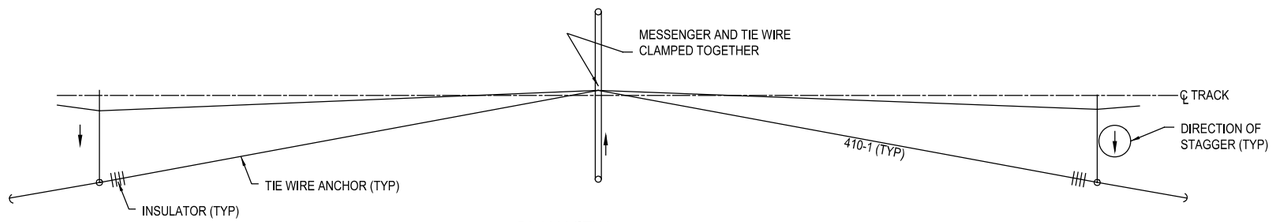

PLAN VIEW

SIDE POLE ARRANGEMENT
ANCHOR STRUCTURE
N.T.S.

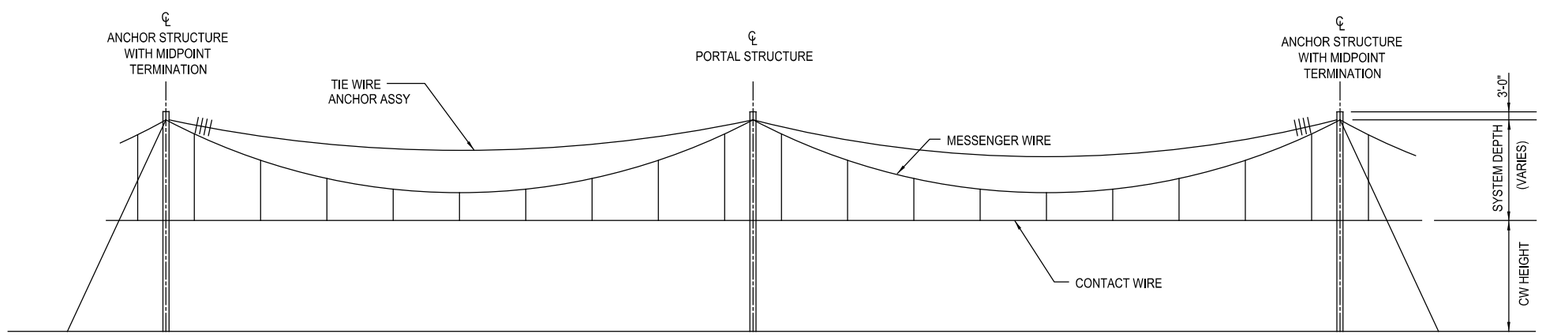

ELEVATION

N.T.S.

NOTES:

1. STAGGERS ARE SHOW FOR ILLUSTRATION ONLY, FOR ACTUAL STAGGERS SEE LAYOUT PLANS.

NOT FOR CONSTRUCTION

SERIES SYSDT-16 OF SYSDT-53

HDR Engineering, Inc.
8550 W Bryn Mawr Ave., Suite 900
Chicago, IL 60631

www.hdrinc.com

Burns

BURNS ENGINEERING, INC. | 215 979-7700
TWO COMMERCE SQUARE, 2001 MARKET ST, SUITE 600
PHILADELPHIA, PA 19103

ISSUE	DATE	DESCRIPTION

NICTD

NORTHERN INDIANA COMMUTER
TRANSPORTATION DISTRICT
33 East Highway 12
Chesterton, Indiana 46304

WEST LAKE CORRIDOR

DYER TO HAMMOND, INDIANA

DESIGNED:	RSW
DRAWN:	MJA
CHECKED:	MP
DATE:	07/21/17

NICTD - WEST LAKE CORRIDOR - MP WL 61.38 TO WL 69.18
SINGLE TRACK

MIDPOINT ANCHOR SYSTEM

FILENAME	SHT_WL_OCS_DT_313.dgn
SCALE	AS NOTED

SHEET 68 OF 248

PLOT DATE: 7/19/2017 9:26:50 PM JKIELLMA

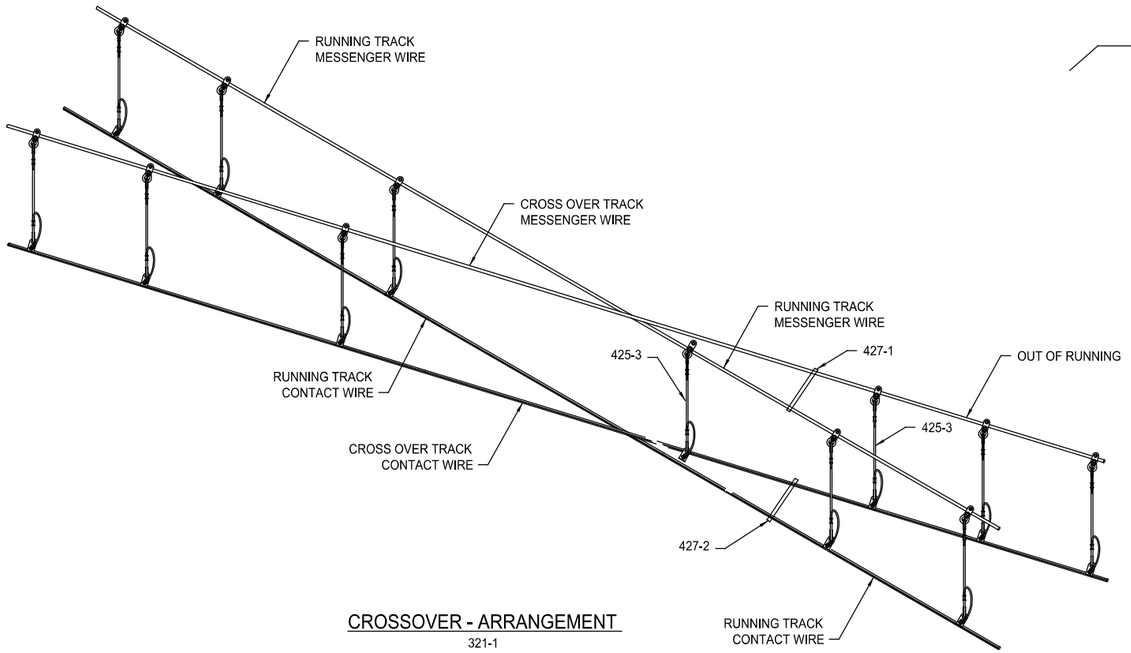

CROSSOVER - ARRANGEMENT
321-1

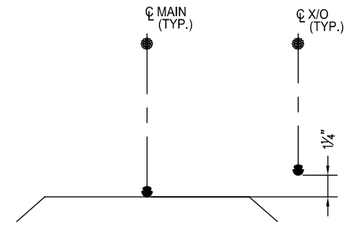

TANGENT TRK.

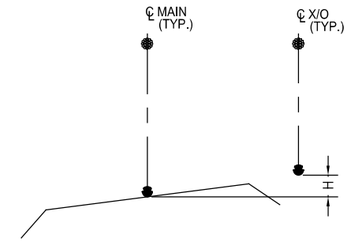

CURVED TRK. (X/O FROM OUTSIDE)

S.E.	"H"
2 1/2"	2 1/2"
2"	2 1/4"
1 1/2"	2"
1"	1 3/4"
1/2"	1 1/2"

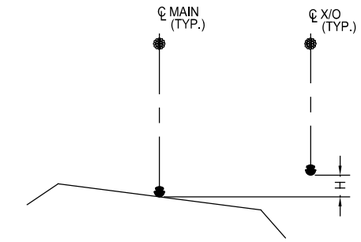

CURVED TRK. (X/O FROM INSIDE)

S.E.	"H"
2 1/2"	0"
2"	1/4"
1 1/2"	1/2"
1"	3/4"
1/2"	1"

NOTES:

1. SECTION VIEWS SHOW RELATIVE POSITIONS OF THE CONTACT WIRE WHEN THE CONTACT WIRES ARE SEPARATED BY 3 FEET IN THE HORIZONTAL PLANE.

2. ADJUST HANGER SPACING AND LENGTHS AS REQUIRED.

BILL OF MATERIAL FOR ASSEMBLY 321-1		
DESCRIPTION	ASSEMBLY	QTY.
FLEXIBLE HANGER	425-3	AS SHOWN
KNUCKLE ASSEMBLY	427-1	1
CW SPREADER BAR	427-2	1

NOT FOR CONSTRUCTION

SERIES SYSDT-17 OF SYSDT-53

JKOELLMA

PLOT DATE: 7/19/2017 9:27:02 PM

HDR Engineering, Inc.
8550 W Bryn Mawr Ave., Suite 900
Chicago, IL 60631
www.hdrinc.com

Burns
BURNS ENGINEERING, INC. | 215 979-7700
TWO COMMERCE SQUARE, 2001 MARKET ST, SUITE 600
PHILADELPHIA, PA 19103

ISSUE	DATE	DESCRIPTION

NICTD
NORTHERN INDIANA COMMUTER TRANSPORTATION DISTRICT
33 East Highway 12
Chesterton, Indiana 46304

WEST LAKE CORRIDOR
DYER TO HAMMOND, INDIANA

DESIGNED: RSW
DRAWN: MJA
CHECKED: MP
DATE: 07/21/17

NICTD - WEST LAKE CORRIDOR - MP WL 61.38 TO WL 69.18
SINGLE TRACK

CROSSOVER 321 SYSTEM

FILENAME: SHT_WL_OCS_DT_321.dgn
SCALE: AS NOTED

SHEET 69 OF 248

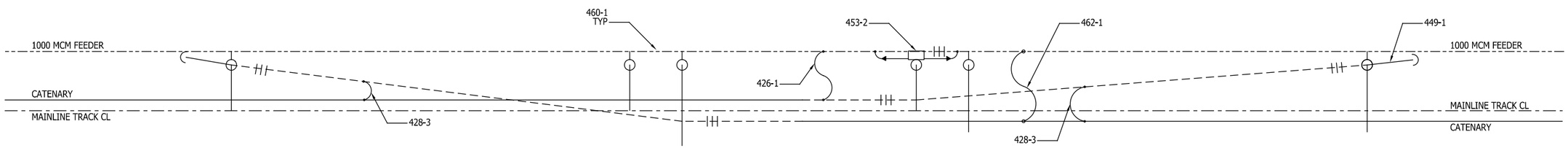

SECTIONALIZING SWITCH AT INSULATED OVERLAP
330-1

NOT FOR CONSTRUCTION

SERIES SYSDT-18 OF SYSDT-53

JKIELLMA

PLOT DATE: 7/19/2017 9:27:18 PM

HDR Engineering, Inc.
8550 W Bryn Mawr Ave., Suite 900
Chicago, IL 60631

www.hdrinc.com

Burns
BURNS ENGINEERING, INC. | 215 979-7700
TWO COMMERCE SQUARE, 2001 MARKET ST, SUITE 600
PHILADELPHIA, PA 19103

ISSUE	DATE	DESCRIPTION

NICTD
NORTHERN INDIANA COMMUTER TRANSPORTATION DISTRICT
33 East Highway 12
Chesterton, Indiana 46304

WEST LAKE CORRIDOR
DYER TO HAMMOND, INDIANA

DESIGNED:	RSW
DRAWN:	MJA
CHECKED:	MP
DATE:	07/21/17

NICTD - WEST LAKE CORRIDOR - MP WL 61.38 TO WL 69.18
SINGLE TRACK

SECTIONALIZING SWITCH 330 SYSTEM

FILENAME	SHT_WL_OCS_DT_330.dgn
SCALE	AS NOTED

SHEET **70 OF 248**

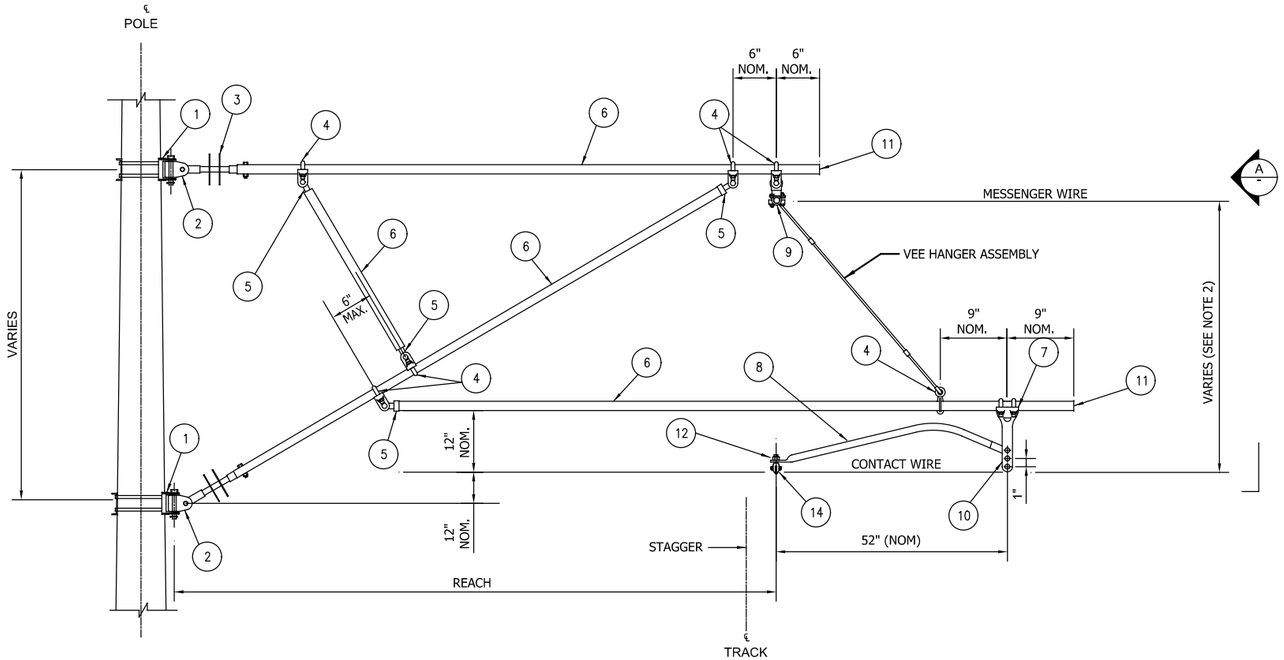

PUSH-OFF SINGLE TRACK CANTILEVER

400-1 (SINGLE STEADY ARM)

BILL OF MATERIAL FOR ASSEMBLY 400-1			
ITEM	DESCRIPTION	VENDOR/CAT #	QUANTITY 400-1
1	CANTILEVER MOUNT BRACKET	GOYAL INDS 60012	2
2	HINGE BRACKET	GOYAL INDS 60012	2
3	PIPE END INSULATOR	GOYAL INDS 60025	2
4	PIPE CLAMP CLEVIS TYPE	GOYAL INDS 62009	6
5	PIPE TO CLEVIS END FITTING	GOYAL INDS 62018	4
6	2" DIA. SCH. 40, GALVANIZED PIPE	GOYAL INDS 90227	AS REQ'D
7	ADJUSTABLE DROP BRACKET	GOYAL INDS 62034	1
8	CURVED STEADY ARM, 1½" SPS SCH. 40	GOYAL INDS 62022	1
9	MESSENGER SWIVEL SUSPENSION CLAMP	GOYAL INDS 60036	1
10	STEADY ARM FITTING	GOYAL INDS 62022	1
11	CAP - 2" DIA. PIPE	GOYAL INDS 63051	2
12	CONTACT WIRE CLAMP HOLDER	GOYAL INDS 62022	1
14	CONTACT WIRE SWIVEL CLAMP	GOYAL INDS 62022	1
15	THIMBLE FOR 1/4" WIRE ROPE	GOYAL INDS 90211	4
16	OVAL SLEEVE FOR 1/4" SST, NOTE 5	GOYAL INDS 90212	8
17	1/4" SST CABLE 7x19	GOYAL INDS 90217	AS REQ'D
18	CLAMP FOR 0.613" DIA. MESSENGER	GOYAL INDS 63052	2
19	REGISTRATION ARM BRACKET ASSEMBLY	GOYAL INDS 60043	1

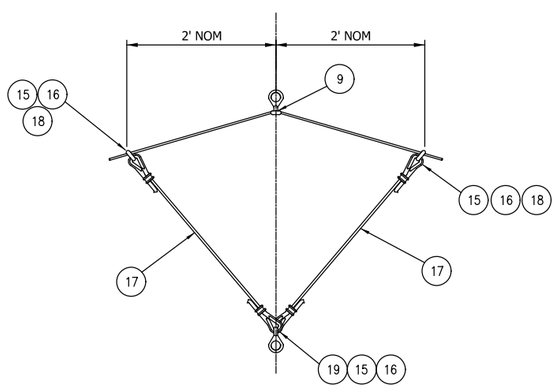

SECTION A

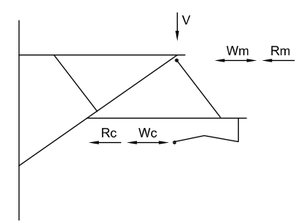

LOADING DIAGRAM					
MAXIMUM REACH	MAXIMUM LOADING (LBS.)				
	Wc	Rc	Wm	Rm	V
11'-0"	150	780	150	780	870

NOTES:

1. FOR THE AMOUNT AND DIRECTION OF STAGGER, REFER TO CATENARY LAYOUT PLAN.
2. FOR DESIGN SYSTEM HEIGHT, REFER TO CATENARY LAYOUT PLAN.
3. CONTRACTOR TO ESTABLISH CANTILEVER CONFIGURATION BASED ON LOADING AND POLE SET OUT DIMENSION AT EACH INDIVIDUAL LOCATION.
4. STEADY ARM TO BE STRAIGHT OR CURVED TO SUIT LOADING CONDITION SUBJECT TO PANTOGRAPH CLEARANCE.
5. TWO SLEEVES REQUIRED FOR EACH LOOP EYE.

NOT FOR CONSTRUCTION

SERIES SYSDT-19 OF SYSDT-53

JKIELLMA

PLOT DATE: 7/19/2017 9:27:35 PM

HDR Engineering, Inc.
8550 W Bryn Mawr Ave., Suite 900
Chicago, IL 60631
www.hdrinc.com

Burns
BURNS ENGINEERING, INC. | 215 979-7700
TWO COMMERCE SQUARE, 2001 MARKET ST, SUITE 600
PHILADELPHIA, PA 19103

ISSUE	DATE	DESCRIPTION

NICTD
NORTHERN INDIANA COMMUTER TRANSPORTATION DISTRICT
33 East Highway 12
Chesterton, Indiana 46304

WEST LAKE CORRIDOR
DYER TO HAMMOND, INDIANA

DESIGNED: RSW
DRAWN: VJC
CHECKED: MP
DATE: 07/21/17

NICTD - WEST LAKE CORRIDOR - MP WL 61.38 TO WL 69.18
SINGLE TRACK

CANTILEVER 400 SYSTEM

FILENAME SHT_WL_OCS_DT_400.dgn
SCALE AS NOTED

SHEET 71 OF 248

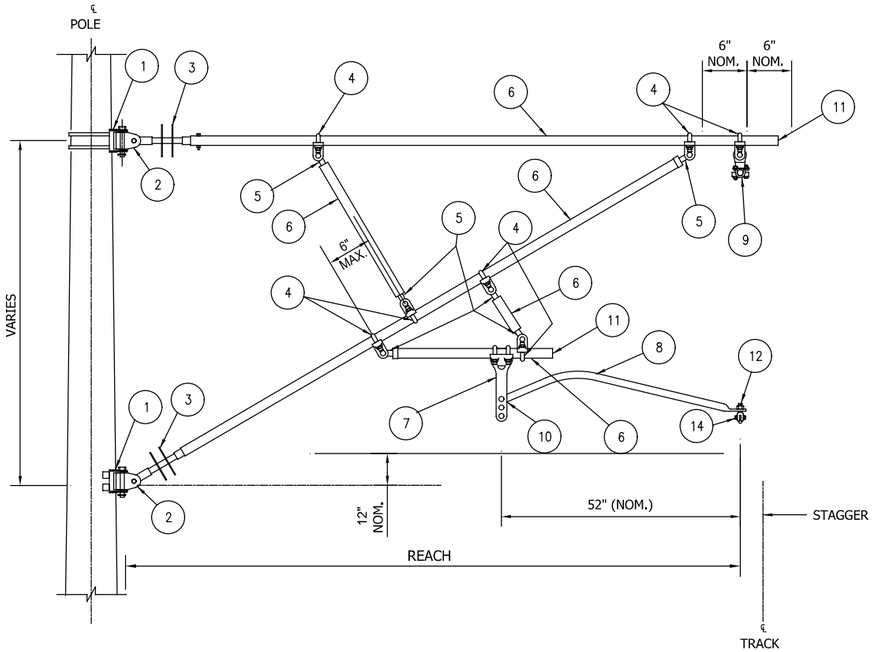

PULL-OFF SINGLE TRACK CANTILEVER

401-1 (SINGLE STEADY ARM)

BILL OF MATERIAL FOR ASSEMBLY 401-1

ITEM	DESCRIPTION	VENDOR/CAT #	QUANTITY 401-1
1	CANTILEVER MOUNT BRACKET	GOYAL INDS 60012	2
2	HINGE BRACKET	GOYAL INDS 60012	2
3	PIPE END INSULATOR	GOYAL INDS 60025	2
4	PIPE CLAMP CLEVIS TYPE	GOYAL INDS 62009	7
5	PIPE TO CLEVIS END FITTING	GOYAL INDS 62018	6
6	2" DIA. SCH. 40, GALVANIZED PIPE	GOYAL INDS 90227	AS REQ'D
7	ADJUSTABLE DROP BRACKET	GOYAL INDS 62034	1
8	CURVED STEADY ARM, 1¼" SPS SCH. 40	GOYAL INDS 62022	1
9	MESSENGER SWIVEL SUSPENSION CLAMP	GOYAL INDS 60036	1
10	STEADY ARM FITTING	GOYAL INDS 62022	1
11	CAP - 2" DIA. PIPE	GOYAL INDS 63051	2
12	CONTACT WIRE CLAMP HOLDER	GOYAL INDS 62022	1
14	CONTACT WIRE SWIVEL CLAMP	GOYAL INDS 62022	1

NOTES:

1. FOR THE AMOUNT AND DIRECTION OF STAGGER, REFER TO CATENARY LAYOUT PLAN.
2. FOR DESIGN SYSTEM HEIGHT, REFER TO CATENARY LAYOUT PLAN.
3. CONTRACTOR TO ESTABLISH CANTILEVER CONFIGURATION BASED ON LOADING AND POLE SET OUT DIMENSION AT EACH INDIVIDUAL LOCATION.
4. STEADY ARM TO BE STRAIGHT OR CURVED TO SUIT LOADING CONDITION SUBJECT TO PANTOGRAPH CLEARANCE.

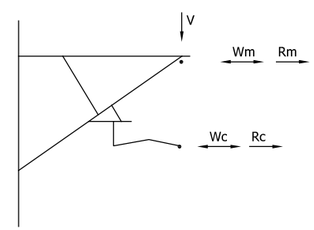

LOADING DIAGRAM

MAXIMUM REACH	MAXIMUM LOADING (LBS.)				
	Wc	Rc	Wm	Rm	V
12'-0"	150	780	150	780	870

NOT FOR CONSTRUCTION

SERIES SYSDT-20 OF SYSDT-53

JKIELLMA

PLOT DATE: 7/19/2017 9:27:51 PM

HDR Engineering, Inc.
8550 W Bryn Mawr Ave., Suite 900
Chicago, IL 60631
www.hdrinc.com

Burns
BURNS ENGINEERING, INC. | 215 979-7700
TWO COMMERCE SQUARE, 2001 MARKET ST, SUITE 600
PHILADELPHIA, PA 19103

ISSUE	DATE	DESCRIPTION

NICTD
NORTHERN INDIANA COMMUTER TRANSPORTATION DISTRICT
33 East Highway 12
Chesterton, Indiana 46304

WEST LAKE CORRIDOR
DYER TO HAMMOND, INDIANA

DESIGNED: RSW
DRAWN: VJC
CHECKED: MP
DATE: 07/21/17

NICTD - WEST LAKE CORRIDOR - MP WL 61.38 TO WL 69.18
SINGLE TRACK

CANTILEVER 401 SYSTEM

FILENAME SHT_WL_OCS_DT_401.dgn
SCALE AS NOTED

SHEET 72 OF 248

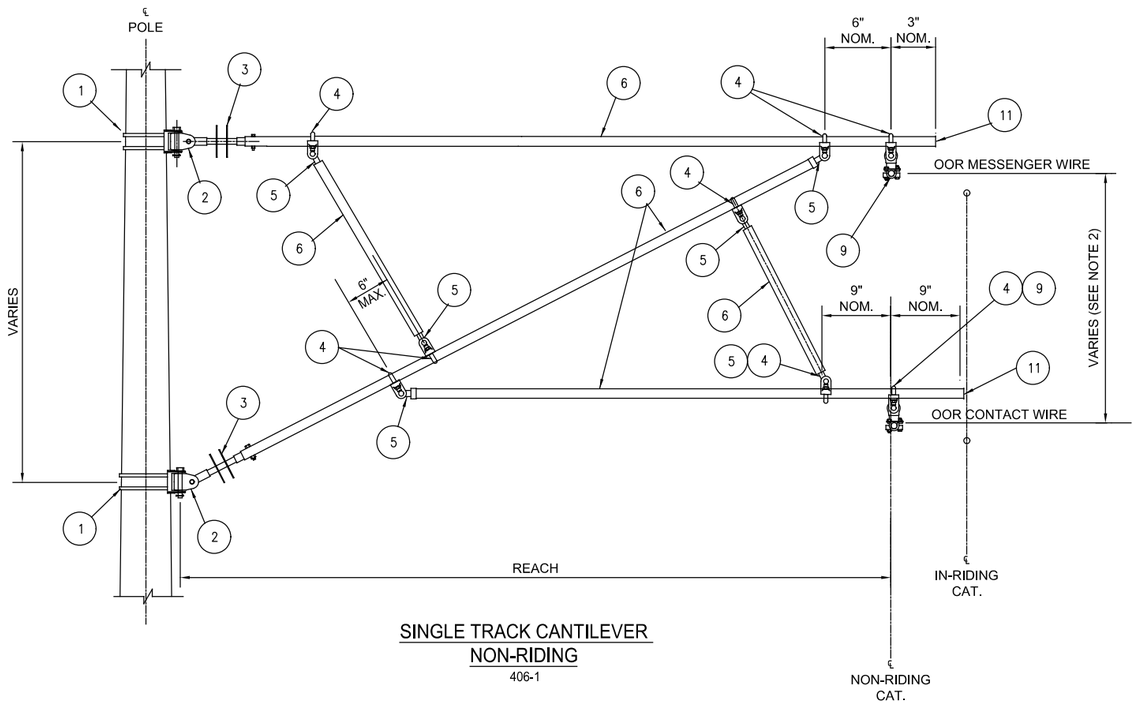

SINGLE TRACK CANTILEVER
NON-RIDING
406-1

BILL OF MATERIAL FOR ASSEMBLY 406-1			
ITEM	DESCRIPTION	VENDOR/CAT #	QUANTITY 406-1
1	CANTILEVER MOUNT BRACKET	GOYAL INDS 60012	2
2	HINGE BRACKET	GOYAL INDS 60012	2
3	PIPE END INSULATOR	GOYAL INDS 60025	2
4	PIPE CLAMP CLEVIS TYPE	GOYAL INDS 62009	8
5	PIPE TO CLEVIS END FITTING	GOYAL INDS 62018	6
6	2" DIA. SCH. 40, GALVANIZED PIPE	GOYAL INDS 90227	AS REQ'D
9	MESSENGER SWIVEL SUSPENSION CLAMP	GOYAL INDS 60036	2
11	CAP - 2" DIA. PIPE	GOYAL INDS 63051	2

NOTES:

1. FOR THE AMOUNT AND DIRECTION OF STAGGER, REFER TO CATENARY LAYOUT PLAN.
2. FOR DESIGN SYSTEM HEIGHT, REFER TO CATENARY LAYOUT PLAN.
3. CONTRACTOR TO ESTABLISH CANTILEVER CONFIGURATION BASED ON LOADING AND POLE SET OUT DIMENSION AT EACH INDIVIDUAL LOCATION.
4. STEADY ARM TO BE STRAIGHT OR CURVED TO SUIT LOADING CONDITION SUBJECT TO PANTOGRAPH CLEARANCE.

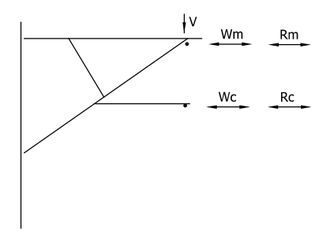

LOADING DIAGRAM					
MAXIMUM REACH	MAXIMUM LOADING (LBS.)				
	Wc	Rc	Wm	Rm	V
10'-0"	150	780	150	780	870
11'-0"	120	780	120	780	700

NOT FOR CONSTRUCTION

SERIES SYSDT-21 OF SYSDT-53

JKCELLMA

PLOT DATE: 7/19/2017 9:28:08 PM

HDR Engineering, Inc.
8550 W Bryn Mawr Ave., Suite 900
Chicago, IL 60631
www.hdrinc.com

Burns
BURNS ENGINEERING, INC. | 215 979-7700
TWO COMMERCE SQUARE, 2001 MARKET ST, SUITE 600
PHILADELPHIA, PA 19103

ISSUE	DATE	DESCRIPTION

NICTD
NORTHERN INDIANA COMMUTER TRANSPORTATION DISTRICT
33 East Highway 12
Chesterton, Indiana 46304

WEST LAKE CORRIDOR
DYER TO HAMMOND, INDIANA

DESIGNED: RSW
DRAWN: VJC
CHECKED: MP
DATE: 07/21/17

NICTD - WEST LAKE CORRIDOR - MP WL 61.38 TO WL 69.18
SINGLE TRACK

CANTILEVER 406 SYSTEM

FILENAME SHT_WL_OCS_DT_406.dgn
SCALE AS NOTED

SHEET 73 OF 248

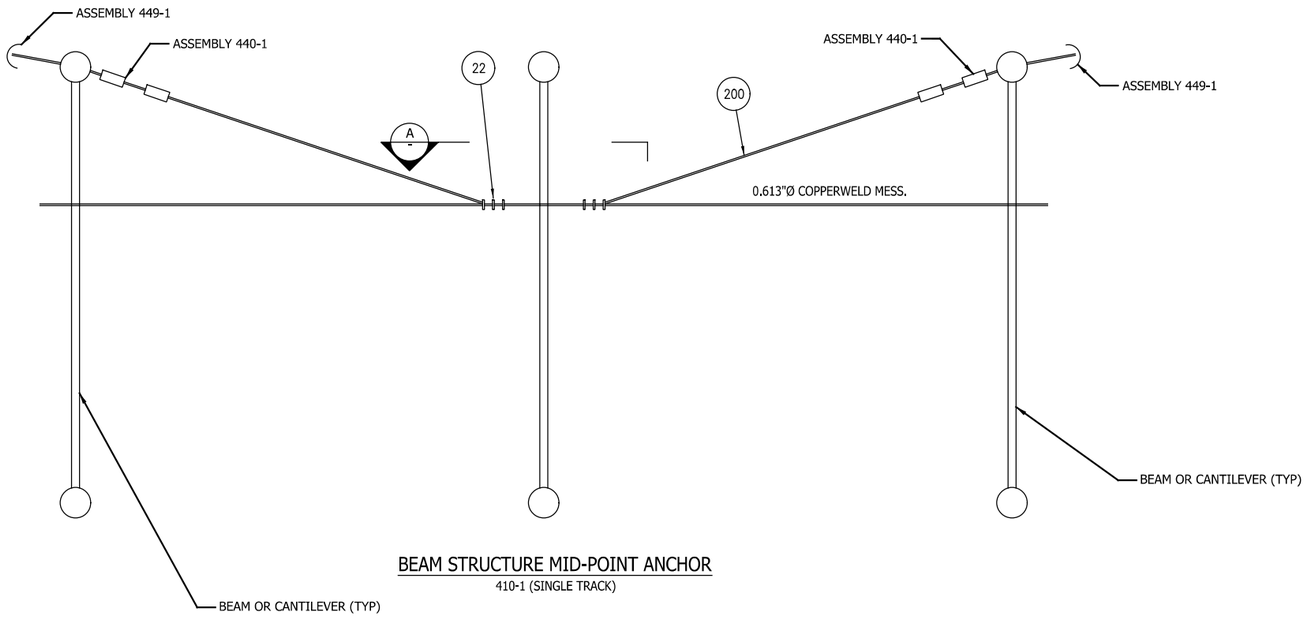

BEAM STRUCTURE MID-POINT ANCHOR

410-1 (SINGLE TRACK)

BILL OF MATERIAL FOR ASSEMBLY 410-1			
ITEM	DESCRIPTION	VENDOR/CAT #	QUANTITY 410-1
-	MESSENGER DEAD END	ASSEMBLY 440-1	2
-	DOWN GUY	ASSEMBLY 449-1	2
200	0.613" DIA. COPPERWELD WIRE	-	AS REQ'D
22	⅝" WIRE ROPE CLIPS	GOYAL INDS 90203	6

NOTES:

1. SINGLE TRACK MPA SHOWN, 2 TRACK SIMILAR. DOUBLE THE QUANTITIES
2. ADD (2) HEAVY POLE BANDS FOR ATTACHMENT OF MPA DOWN GUY.
3. OMIT TURNBUCKLE IN MESSENGER DEAD END.

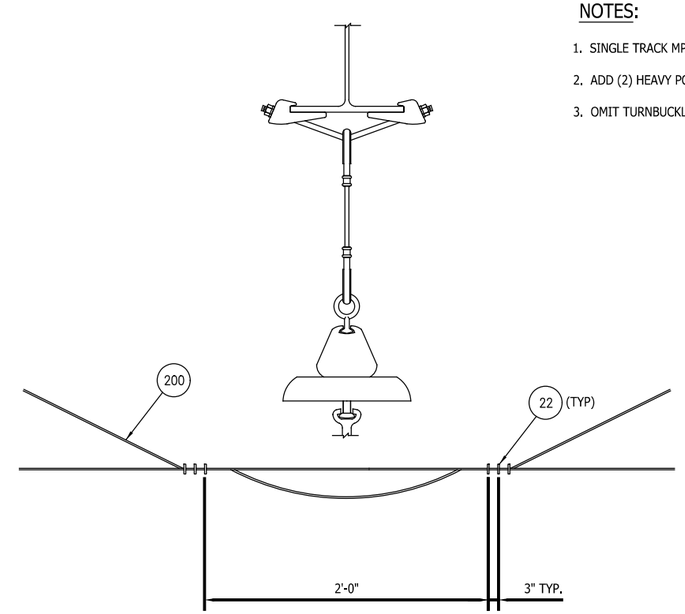

SECTION A

NOT FOR CONSTRUCTION

SERIES SYSDT-22 OF SYSDT-53

JKIELLMA

PLOT DATE: 7/19/2017 9:28:22 PM

HDR Engineering, Inc.
8550 W Bryn Mawr Ave., Suite 900
Chicago, IL 60631
www.hdrinc.com

Burns
BURNS ENGINEERING, INC. | 215 979-7700
TWO COMMERCE SQUARE, 2001 MARKET ST, SUITE 600
PHILADELPHIA, PA 19103

ISSUE	DATE	DESCRIPTION

NICTD
NORTHERN INDIANA COMMUTER TRANSPORTATION DISTRICT
33 East Highway 12
Chesterton, Indiana 46304

WEST LAKE CORRIDOR
DYER TO HAMMOND, INDIANA

DESIGNED: RSW
DRAWN: VJC
CHECKED: MP
DATE: 07/21/17

NICTD - WEST LAKE CORRIDOR - MP WL 61.38 TO WL 69.18
SINGLE TRACK

MID-POINT ANCHOR 410 SYSTEM

FILENAME: SHT_WL_OCS_DT_410.dgn
SCALE: AS NOTED

SHEET 74 OF 248

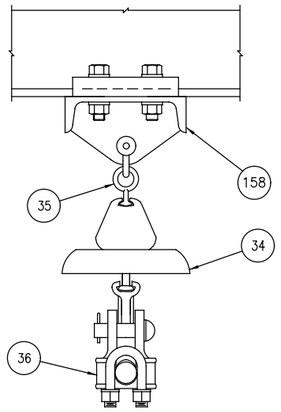

MESSENGER SUSPENSION ASSEMBLY
416-1

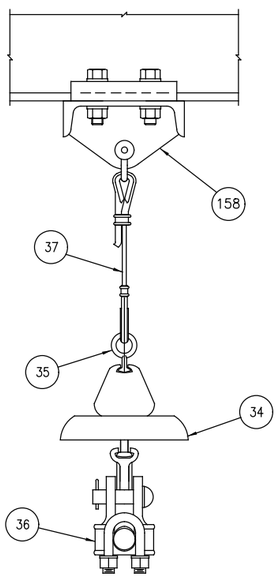

MESSENGER SUSPENSION ASSEMBLY
416-2

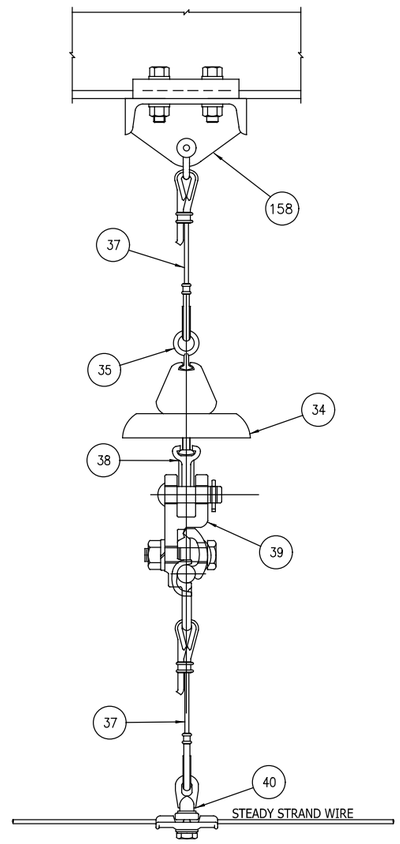

MESSENGER SUSPENSION ASSEMBLY
416-3

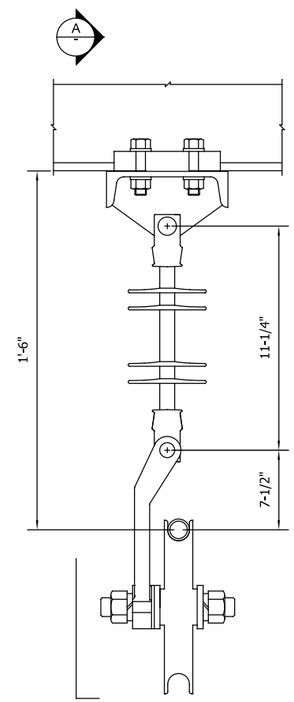

MESSENGER WIRE PULLEY SUPPORT
416-6

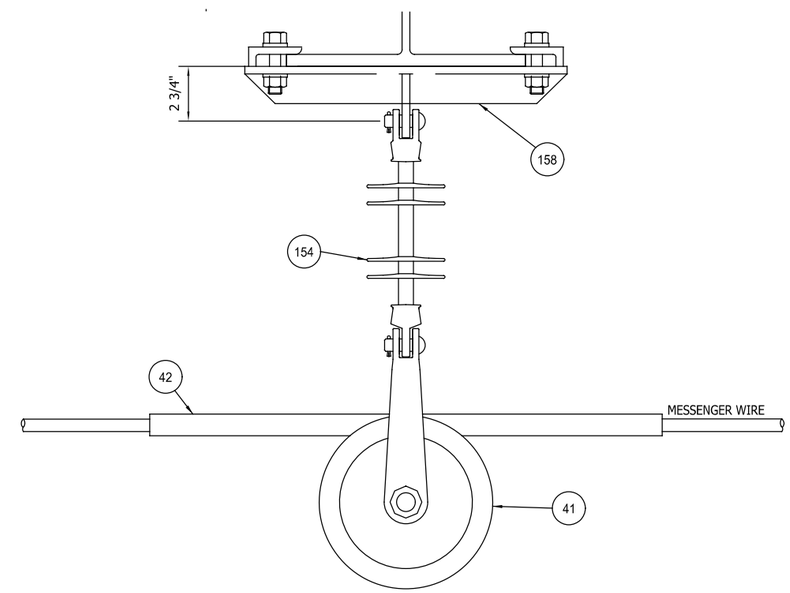

SECTION A

BILL OF MATERIAL FOR ASSEMBLIES 416-1, 416-2, 416-3 & 416-6

ITEM	DESCRIPTION	VENDOR/CAT #	QUANTITY			
			416-1	416-2	416-3	416-6
34	SUSPENSION INSULATOR	GOYALINDS 90122	1	1	1	-
35	BALL EYE	GOYALINDS 70610	1	1	1	-
36	SUSPENSION CLAMP FOR 0.613" Ø WIRE	GOYALINDS 70605	1	1	-	-
37	SUSPENSION CABLE ASSEMBLY	GOYALINDS 70616	-	1	2	-
38	SOCKET CONNECTOR	GOYALINDS 90123	-	-	1	-
39	SUSPENSION CLAMP	GOYALINDS 70604	-	-	1	-
40	SINGLE EYE SUPPORT SPAN CLAMP (0.19-0.50)	GOYALINDS 70603	-	-	1	-
41	PULLEY AND PULLEY HOLDER ASSEMBLY	GOYALINDS 63102	-	-	-	1
42	ARMOR ROD 60"	GOYALINDS 90124	-	-	-	1
154	SYNTHETIC SUSPENSION INSULATOR W/ WEATHER SHIELDS	-	-	-	-	1
158	SLIDING CLAMP	GOYAL INDS 62035	1	1	1	1

NOTES:

1. ARMOR ROD SHOULD BE CENTERED ON ASSEMBLY AT 60°F.

NOT FOR CONSTRUCTION

SERIES SYSDT-23 OF SYSDT-53

HDR Engineering, Inc.
8550 W Bryn Mawr Ave., Suite 900
Chicago, IL 60631
www.hdrinc.com

Burns
BURNS ENGINEERING, INC. | 215 979-7700
TWO COMMERCE SQUARE, 2001 MARKET ST, SUITE 600
PHILADELPHIA, PA 19103

ISSUE	DATE	DESCRIPTION

NICTD
NORTHERN INDIANA COMMUTER TRANSPORTATION DISTRICT
33 East Highway 12
Chesterton, Indiana 46304

WEST LAKE CORRIDOR
DYER TO HAMMOND, INDIANA

DESIGNED: RSW
DRAWN: JLD
CHECKED: MP
DATE: 07/21/17

NICTD - WEST LAKE CORRIDOR - MP WL 61.38 TO WL 69.18
SINGLE TRACK

MESSENGER SUPPORT 416 SYSTEM

FILENAME: SHT_WL_OCS_DT_416.dgn
SCALE: AS NOTED

PLOT DATE: 7/19/2017 9:28:34 PM JKOELLMA

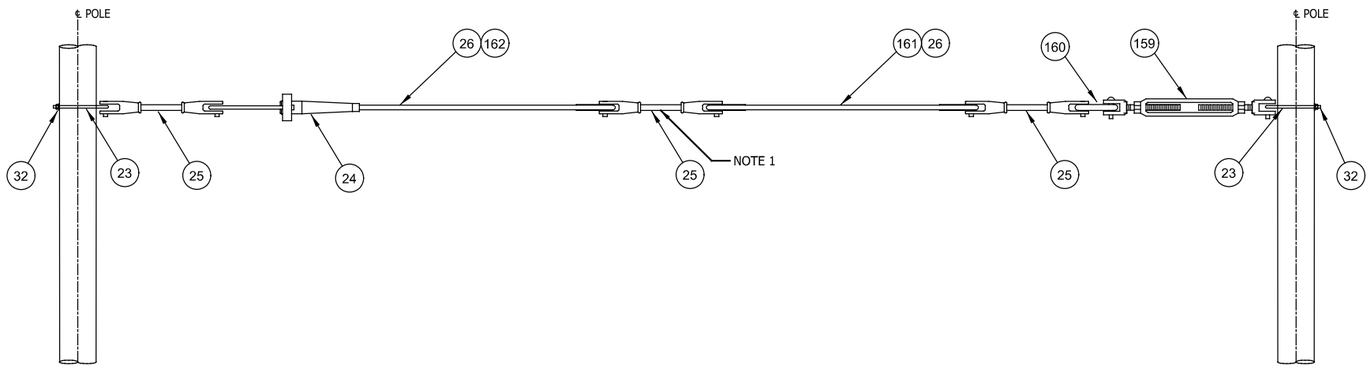

STEADY SPAN ASSEMBLY FOR PORTALS

417-1

BILL OF MATERIAL FOR ASSEMBLIES 417-1, 417-2-L & 417-5					
ITEM	DESCRIPTION	VENDOR/CAT #	QUANTITY		
			417-1	417-2-L	417-5
23	SHOULDER EYE BOLT	GOYAL INDS 90213	2	-	
24	STRANDVISE FOR 3/8" STRAND	GOYAL INDS 70624	1	-	
25	STRAIN INSULATOR	GOYAL INDS 70615	3	-	
26	3/8" EHS GALVANIZED STEEL STRAND	GOYAL INDS 90229	AS REQ'D	-	
32	CURVED WASHER	GOYAL INDS 90202	2	-	
30	CONTACT WIRE SWIVEL CLAMP	GOYAL INDS 62025	-	1	1
45	STRAIN CLAMP	GOYAL INDS 70606	-	1	
155	REGISTRATION ARM 1 1/4" SPS SCH. 40	GOYAL INDS 62023	-	1	1
159	TURNBUCKLE JAW TO JAW	GOYAL INDS 63071	1		
160	DOUBLE EYE LINK	GOYAL INDS 90213	1		
161	SUPPORT AND SUSPENSION CABLE ASSEMBLY	GOYAL INDS 90230	1		
162	SUPPORT AND SUSPENSION CABLE ASSEMBLY	GOYAL INDS 90321	1		

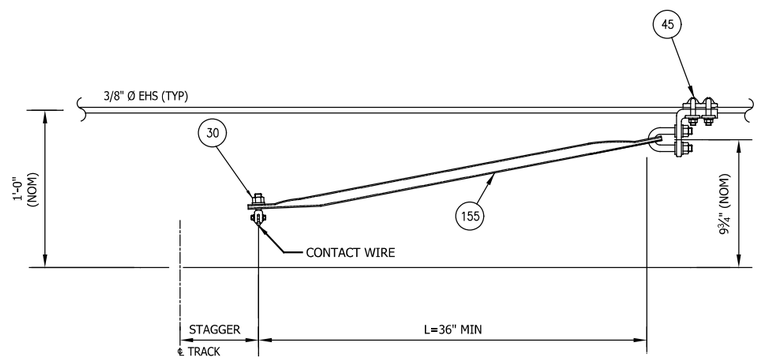

STEADY ARM SUPPORT

417-2-L

NOTE:

1. FOR TRACKS THAT ARE WITHIN THE SAME ELECTRICAL SECTION, OMIT IN-SPAN INSULATION.

NOT FOR CONSTRUCTION

SERIES SYSDT-24 OF SYSDT-53

JKIELLMA

PLOT DATE: 7/19/2017 9:28:46 PM

HDR Engineering, Inc.
8550 W Bryn Mawr Ave., Suite 900
Chicago, IL 60631
www.hdrinc.com

Burns
BURNS ENGINEERING, INC. | 215 979-7700
TWO COMMERCE SQUARE, 2001 MARKET ST, SUITE 600
PHILADELPHIA, PA 19103

ISSUE	DATE	DESCRIPTION

NICTD
NORTHERN INDIANA COMMUTER TRANSPORTATION DISTRICT
33 East Highway 12
Chesterton, Indiana 46304

WEST LAKE CORRIDOR
DYER TO HAMMOND, INDIANA

DESIGNED: RSW
DRAWN: VJC
CHECKED: MP
DATE: 07/21/17

NICTD - WEST LAKE CORRIDOR - MP WL 61.38 TO WL 69.18
SINGLE TRACK

STEADY SPAN 417 SYSTEM

FILENAME: SHT_WL_OCS_DT_417.dgn
SCALE: AS NOTED

SHEET 76 OF 248

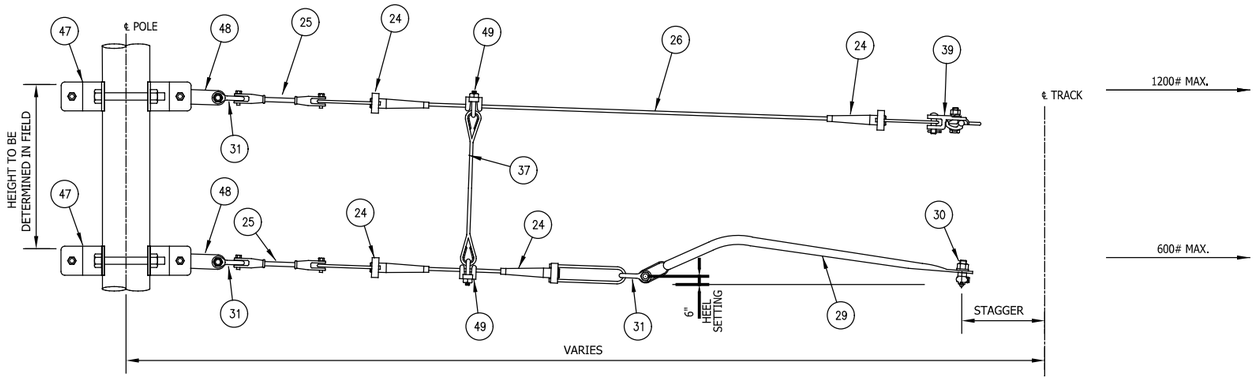

SINGLE TRACK PULL-OFF ASSEMBLY

418-1

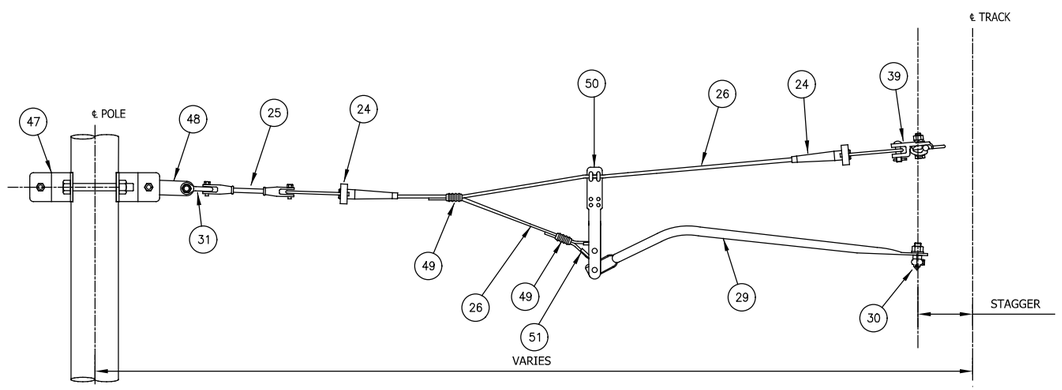

SINGLE TRACK PULL-OFF ASSEMBLY

418-2

BILL OF MATERIAL FOR ASSEMBLIES 418-1 & 418-2				
ITEM	DESCRIPTION	VENDOR/CAT #	QUANTITY	
			418-1	418-2
47	POLE BAND, HEAVY DUTY STEEL	GOYAL INDS 90119	2	1
48	CONNECTING LINK	GOYAL INDS 90120	2	1
49	WIRELOCK FOR 3/8" STRAND	GOYAL INDS 90201	2	5
25	STRAIN INSULATOR CLEVIS-CLEVIS	GOYAL INDS 70615	2	1
24	STRANDVISE CONNECTOR FOR 3/8" DIA. STRAND	GOYAL INDS 70624	4	2
39	MESSENGER SUSPENSION CLAMP	GOYAL INDS 70605	1	1
37	SUSPENSION CABLE ASSEMBLY	GOYAL INDS 70616	1	-
29	CURVE STEADY ARM	GOYAL INDS 62025	1	1
26	3/8" DIA. GALV. EHS	GOYAL INDS 90229	AS REQ'D	AS REQ'D
30	CONTACT WIRE SWIVEL CLAMP	GOYAL INDS 62025	1	1
31	ANCHOR SHACKLE, BOLT TYPE	GOYAL INDS 90121	3	1
50	DROP BRACKET	GOYAL INDS 70001	-	1
51	3/8" OPEN END THIMBLE	GOYAL INDS 90232	-	1

NOTE:

1. FOR TRACKS THAT ARE WITHIN THE SAME ELECTRICAL SECTION, OMIT IN-SPAN INSULATION.
2. FOR AMOUNT AND DIRECTION OF STAGGER, REFER TO CATENARY LAYOUT PLAN.
3 ADJUST STEADY ARM HEEL SETTING TO CLEAR AN "UPLIFTED" PANTOGRAPH BY 3" MIN.
4. RADIAL LOAD ON CONTACT WIRE MUST EXCEED REVERSE WIND LOAD PLUS 50LB AT 60 DEG F.
5. FOR HEAVY CONTACT WIRE RADIAL LOADS, THE USE OF TWIN STEADY ARMS WILL BE PERMITTED IN ORDER TO REDUCE THE LOAD ON THE CLIP AND THE CONTACT WIRE TOP LOBE.
6. AT NICTD'S DISCRECTION, OTHER TYPES OF WIRE ENDING FITTINGS WILL BE ACCEPTABLE SUCH AS COMPRESSION DEAD-ENDS, THIMBLES AND WIRE ROPE CLIPS. CONTRACTOR TO SUBMIT ALTERNATE DESIGNS FOR REVEW.

JKIELLMA

PLOT DATE: 7/19/2017 9:28:59 PM

NOT FOR CONSTRUCTION

SERIES SYSDT-25 OF SYSDT-53

HDR Engineering, Inc.
8550 W Bryn Mawr Ave., Suite 900
Chicago, IL 60631
www.hdrinc.com

Burns
BURNS ENGINEERING, INC. | 215 979-7700
TWO COMMERCE SQUARE, 2001 MARKET ST, SUITE 600
PHILADELPHIA, PA 19103

ISSUE	DATE	DESCRIPTION

NICTD
NORTHERN INDIANA COMMUTER TRANSPORTATION DISTRICT
33 East Highway 12
Chesterton, Indiana 46304

WEST LAKE CORRIDOR
DYER TO HAMMOND, INDIANA

DESIGNED: RSW
DRAWN: VJC
CHECKED: MP
DATE: 07/21/17

NICTD - WEST LAKE CORRIDOR - MP WL 61.38 TO WL 69.18
SINGLE TRACK

PULL-OFF 418 SYSTEM

FILENAME SHT_WL_OCS_DT_418.dgn
SCALE AS NOTED

SHEET 77 OF 248

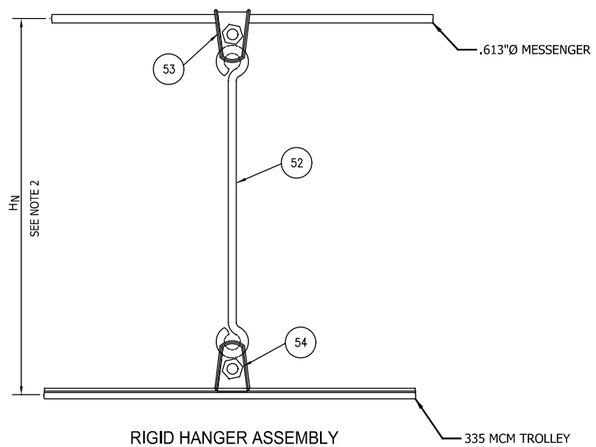

RIGID HANGER ASSEMBLY
425-1

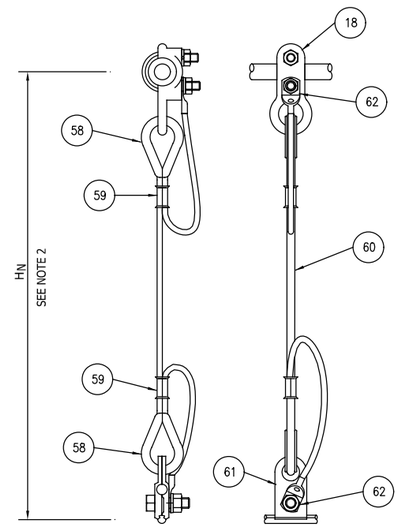

FLEXIBLE HANGER ASSEMBLY
425-3

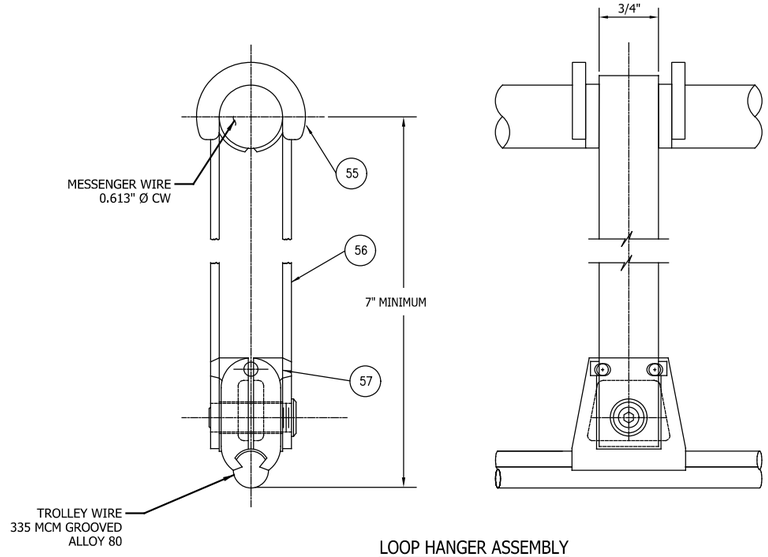

LOOP HANGER ASSEMBLY
425-2

BILL OF MATERIAL FOR ASSEMBLIES 425-1, 425-2 & 425-3

ITEM	DESCRIPTION	VENDOR/CAT #	QUANTITY		
			425-1	425-2	425-3
52	HANGER ROD 0.25" HD COPPER WIRE	GOYAL INDS 90215	FT	-	-
53	CLIP - HANGER ROD TO 0.613" DIA.	GOYAL INDS 63081	1	-	-
54	CLIP - HANGER ROD TO 335 MCM TROLLEY	GOYAL INDS 63082	1	-	-
55	MESSENGER SADDLE W/ LINER	GOYAL INDS 90204	-	1	-
56	STAINLESS STEEL STRAP	GOYAL INDS 90218	-	1	-
57	CONTACT WIRE CLIP WITH HEX. BOLT & LOCKNUT	GOYAL INDS 90205	-	1	-
18	CLAMP FOR 0.613" DIA. MESSENGER	GOYAL INDS 62004	-	-	1
58	¼" STAINLESS STEEL THIMBLE	GOYAL INDS 90211	-	-	2
59	CRIMP SLEEVE FOR FLEXIBLE CABLE	GOYAL INDS 90212	-	-	2
60	¼" DIA. PHOSPHOR BRONZE GRADE E - FLEXIBLE	GOYAL INDS 90217	-	-	AS REQ'D
61	CONTACT WIRE CLAMP	GOYAL INDS 60076	-	-	1
62	TERMINAL END	GOYAL INDS 90216	-	-	2

NOTES:

1. HANGER LENGTHS ARE MEASURED FROM THE CENTER OF WIRE TO CENTER OF WIRE.
2. H_N DESIGNATES NTH HANGER IN THE SPAN.
3. REFER TO DRAWING OCS-210 FOR PLACEMENT OF HANGERS IN SPANS.

NOT FOR CONSTRUCTION

SERIES SYSDT-26 OF SYSDT-53

JKOELLMA

PLOT DATE: 7/19/2017 9:29:11 PM

HDR Engineering, Inc.
8550 W Bryn Mawr Ave., Suite 900
Chicago, IL 60631
www.hdrinc.com

Burns
BURNS ENGINEERING, INC. | 215 979-7700
TWO COMMERCE SQUARE, 2001 MARKET ST, SUITE 600
PHILADELPHIA, PA 19103

ISSUE	DATE	DESCRIPTION

NICTD
NORTHERN INDIANA COMMUTER TRANSPORTATION DISTRICT
33 East Highway 12
Chesterton, Indiana 46304

WEST LAKE CORRIDOR
DYER TO HAMMOND, INDIANA

DESIGNED: RSW
DRAWN: JLD
CHECKED: MP
DATE: 07/21/17

NICTD - WEST LAKE CORRIDOR - MP WL 61.38 TO WL 69.18
SINGLE TRACK

HANGERS 425
SYSTEM

FILENAME: SHT_WL_OCS_DT_425.dgn
SCALE: AS NOTED

SHEET 78 OF 248

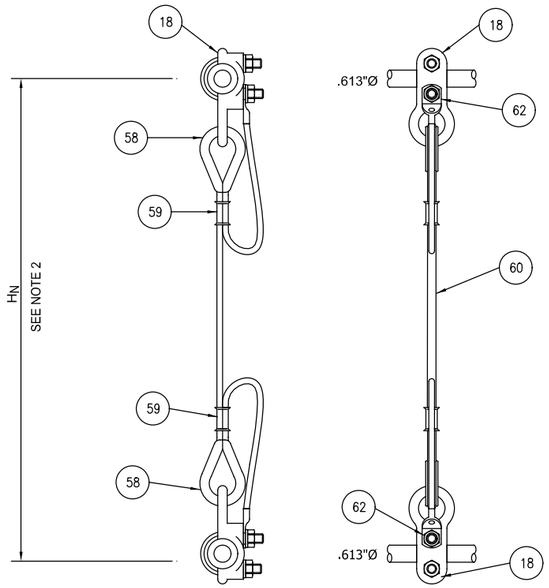

NON-RIDING HANGER ASSEMBLY
426-1

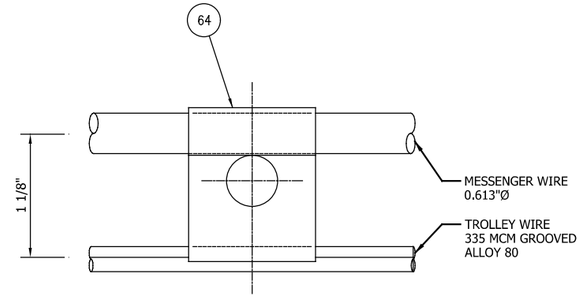

MINIMUM HANGER ASSEMBLY
426-3

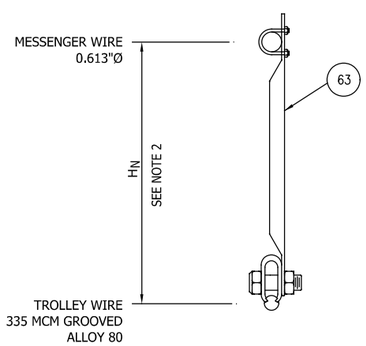

RIGID ANTI-TORSION HANGER ASSEMBLY
426-2

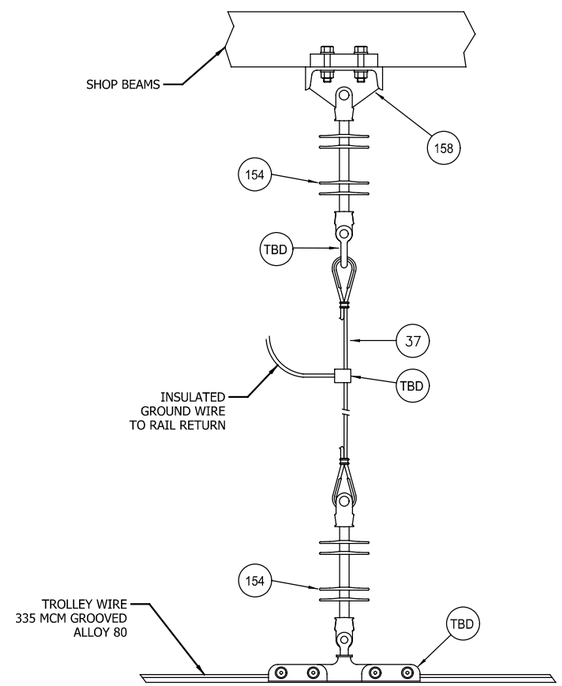

SHOP HANGER ASSEMBLY
426-5

BILL OF MATERIAL FOR ASSEMBLIES 426-1, 426-2, 426-3 & 426-5

ITEM	DESCRIPTION	VENDOR/CAT #	QUANTITY			
			426-1	426-2	426-3	426-5
18	CLAMP FOR 0.613" DIA. MESSENGER	GOYAL INDS 62004	2	-	-	-
58	¼" STAINLESS STEEL THIMBLE	GOYAL INDS 90211	2	-	-	-
59	CRIMP SLEEVE FOR FLEXIBLE CABLE	GOYAL INDS 90212	2	-	-	-
60	¼" DIA. PHOSPHOR BRONZE GRADE E - FLEXIBLE	GOYAL INDS 90217	AS REQ'D	-	-	-
62	TERMINAL END	GOYAL INDS 90216	2	-	-	-
63	RIGID ANTI TORSION HANGER	GOYAL INDS 63101	-	1	-	-
64	TROLLEY - MESSENGER WIRE CLAMP	GOYAL INDS 90116	-	-	1	-
154	SYNTHETIC SUSPENSION INSULATOR W/ WEATHER SHIELDS	-	-	-	-	2
158	SLIDING CLAMP	GOYAL INDS 62035	-	-	-	1
37	SUSPENSION CABLE ASSEMBLY	GOYAL INDS 70616	-	-	-	1
-	SUSPENSION CLAMP 12"	GOYAL INDS	-	-	-	1
-	SHACKLE	GOYAL INDS	-	-	-	1
-	GROUND CLAMP	GOYAL INDS	-	-	-	1

NOTES:

1. HANGER LENGTHS ARE MEASURED FROM THE CENTER OF WIRE TO CENTER OF WIRE.
2. H_N DESIGNATES NTH HANGER IN THE SPAN.
3. REFER TO DRAWING SYSDET-1 FOR PLACEMENT OF HANGERS IN SPANS.

NOT FOR CONSTRUCTION

SERIES SYSDT-27 OF SYSDT-53

JKIELLMA

PLOT DATE: 7/19/2017 9:29:23 PM

HDR Engineering, Inc.
8550 W Bryn Mawr Ave., Suite 900
Chicago, IL 60631
www.hdrinc.com

Burns
BURNS ENGINEERING, INC. | 215 979-7700
TWO COMMERCE SQUARE, 2001 MARKET ST, SUITE 600
PHILADELPHIA, PA 19103

ISSUE	DATE	DESCRIPTION

NICTD
NORTHERN INDIANA COMMUTER TRANSPORTATION DISTRICT
33 East Highway 12
Chesterton, Indiana 46304

WEST LAKE CORRIDOR
DYER TO HAMMOND, INDIANA

DESIGNED: RSW
DRAWN: JLD
CHECKED: MP
DATE: 07/21/17

NICTD - WEST LAKE CORRIDOR - MP WL 61.38 TO WL 69.18
SINGLE TRACK

HANGERS 426 SYSTEM

FILENAME: SHT_WL_OCS_DT_426.dgn
SCALE: AS NOTED

SHEET 79 OF 248

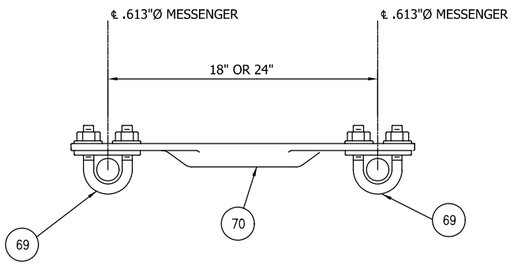

KNUCKLE ASSEMBLY
427-1

BILL OF MATERIAL FOR ASSEMBLIES 427-1 & 427-2				
ITEM	DESCRIPTION	VENDOR/CAT #	QUANTITY	
			427-1	427-2
12	CONTACT WIRE CLAMP HOLDER	-	-	2
30	CONTACT WIRE SWIVEL CLAMP	-	-	2
69	U-BOLT ASSEMBLY	-	2	-
70	1¼" DIA. SCH 40 TUBE	-	1	1

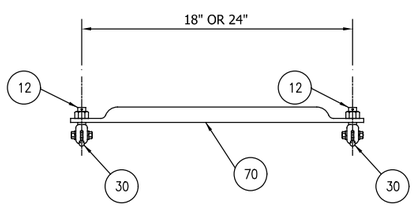

CROSS CONTACT SPREADER BAR ASSEMBLY
427-2

NOTES:

1. HANGER LENGTHS ARE MEASURED FROM THE CENTER OF WIRE TO CENTER OF WIRE.
2. REFER TO DRAWINGS SYSDET-1 FOR PLACEMENT OF HANGERS IN SPANS.

NOT FOR CONSTRUCTION

SERIES SYSDT-28 OF SYSDT-53

HDR Engineering, Inc.
8550 W Bryn Mawr Ave., Suite 900
Chicago, IL 60631
www.hdrinc.com

Burns
BURNS ENGINEERING, INC. | 215 979-7700
TWO COMMERCE SQUARE, 2001 MARKET ST, SUITE 600
PHILADELPHIA, PA 19103

ISSUE	DATE	DESCRIPTION

NICTD
NORTHERN INDIANA COMMUTER TRANSPORTATION DISTRICT
33 East Highway 12
Chesterton, Indiana 46304

WEST LAKE CORRIDOR
DYER TO HAMMOND, INDIANA

DESIGNED: RSW
DRAWN: JLD
CHECKED: MP
DATE: 07/21/17

NICTD - WEST LAKE CORRIDOR - MP WL 61.38 TO WL 69.18
SINGLE TRACK

CROSS CONTACT BAR 427 SYSTEM

FILENAME SHT_WL_OCS_DT_427.dgn
SCALE AS NOTED

SHEET 80 OF 248

PLOT DATE: 7/19/2017 9:29:39 PM
JKIELLMA

BILL OF MATERIAL FOR ASSEMBLIES 428-1, 428-2 & 428-3					
ITEM	DESCRIPTION	VENDOR/CAT #	QUANTITY		
			428-1	428-2	428-3
72	TROLLEY CONTRACT CLAMP 500 MCM - 335 MCM GROOVED	GOYAL INDS 63099	4	1	1
73	PARALLEL CLAMP, BRONZE	GOYAL INDS 70607	4	1	2
77	750 MCM 2KV INSULATED CU. COPPER		AS REQ'D	AS REQ'D	AS REQ'D

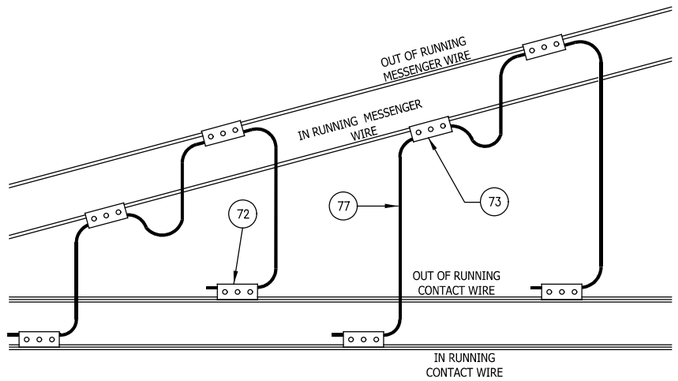

FULL FEED JUMPER

428-1

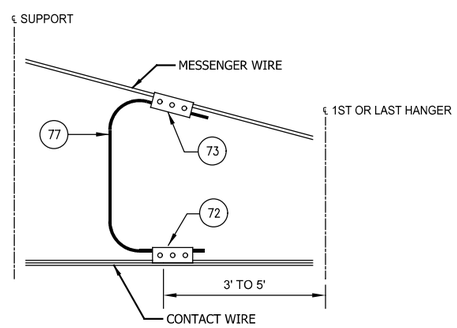

IN SPAN JUMPER

428-2

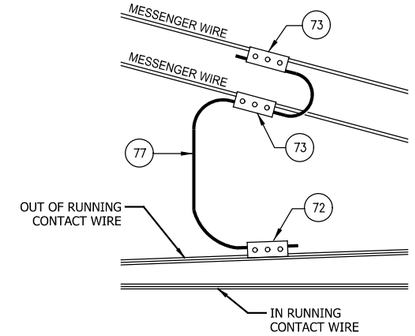

EQUALIZING JUMPER

428-3

JKIELLMA

7/19/2017 9:29:57 PM

PLOT DATE:

HDR Engineering, Inc.
8550 W Bryn Mawr Ave., Suite 900
Chicago, IL 60631

www.hdrinc.com

Burns

BURNS ENGINEERING, INC. | 215 979-7700
TWO COMMERCE SQUARE, 2001 MARKET ST, SUITE 600
PHILADELPHIA, PA 19103

ISSUE	DATE	DESCRIPTION

NICTD
NORTHERN INDIANA COMMUTER TRANSPORTATION DISTRICT
33 East Highway 12
Chesterton, Indiana 46304

WEST LAKE CORRIDOR

DYER TO HAMMOND, INDIANA

DESIGNED:	RSW
DRAWN:	JLD
CHECKED:	MP
DATE:	07/21/17

NOT FOR CONSTRUCTION

SERIES SYSDT-29 OF SYSDT-53

NICTD - WEST LAKE CORRIDOR - MP WL 61.38 TO WL 69.18
SINGLE TRACK

JUMPERS 428 SYSTEM

FILENAME	SHT_WL_OCS_DT_428.dgn
SCALE	AS NOTED

SHEET **81 OF 248**

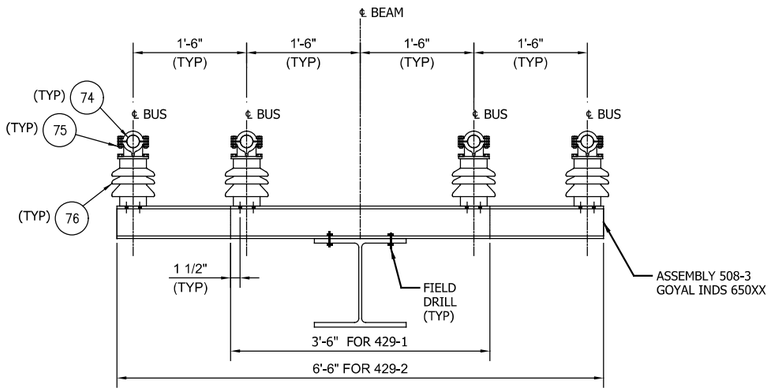

BUS BAR ASSEMBLY 429-X

429-1 (2) BUS BARS (INNER)
429-2 (4) BUS BARS
429-3 (2) BUS BARS (OUTER)
429-4 (1) BUS BAR

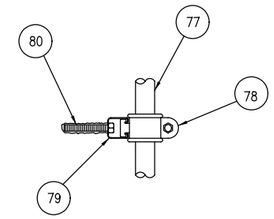

CABLE SUPPORT (5' O.C.)

429-5

BILL OF MATERIAL FOR ASSEMBLIES 429-1, 429-2, 429-3, 429-4, 429-5 & 429-6

ITEM	DESCRIPTION	VENDOR/CAT #	QUANTITY					
			429-1	429-2	429-3	429-4	429-5	429-6
74	2" DIA. BUS BAR, COPPER	GOYAL INDS 90233	AS REQ'D	AS REQ'D	AS REQ'D	AS REQ'D	-	-
75	HORIZONTAL BUS SUPPORT	GOYAL INDS 90207	2	4	2	1	-	-
76	STATION POST INSULATOR, PORCELAIN T.R. 202	GOYAL INDS 90112	2	4	2	1	-	-
77	750 MCM 2 KV INSULATED CU. CABLE	-	-	-	-	-	AS REQ'D	-
78	PORCELAIN CABLE CLAMP	GOYAL INDS 90220	-	-	-	-	1	-
79	SLOTTED TYPE H 1⅞" CHANNEL 6" LONG	GOYAL INDS 90221	-	-	-	-	1	-
80	½" DIA. ANCHOR BOLT	-	-	-	-	-	1	-
81	500 MCM SUPERFLEX BARE CU. CABLE	GOYAL INDS 90208	-	-	-	-	-	AS REQ'D
82	TAP - BUS BAR TO CABLE BRONZE ALLOY	-	-	-	-	-	-	2
72	TROLLEY CONTACT CLAMP 500 MCM TO 335 MCM GROOVED	GOYAL INDS 63099	-	-	-	-	-	2
73	PARALLEL CLAMP, BRONZE 500 MCM TO 0.613" DIA. CW	GOYAL INDS 70607	-	-	-	-	-	4

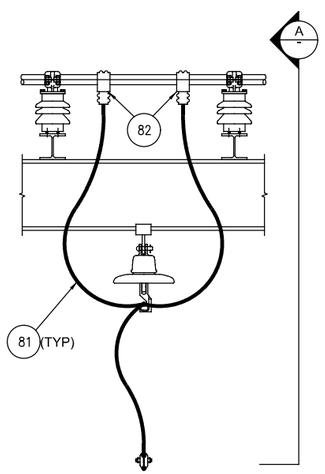

FEEDER ASSEMBLY

429-6

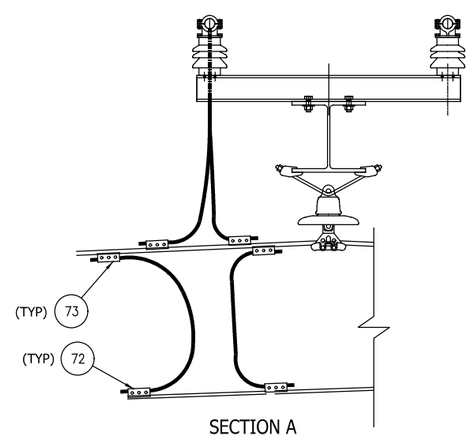

SECTION A

NOTES:

1. ALL MATERIAL & HARDWARE NEW UNLESS NOTED OTHERWISE.
2. MOUNTING HARDWARE TO BE PROVIDED AS INCIDENTAL TO ASSEMBLY MATERIALS.

NOT FOR CONSTRUCTION

SERIES SYSDT-30 OF SYSDT-53

HDR Engineering, Inc.
8550 W Bryn Mawr Ave., Suite 900
Chicago, IL 60631
www.hdrinc.com

Burns
BURNS ENGINEERING, INC. | 215 979-7700
TWO COMMERCE SQUARE, 2001 MARKET ST, SUITE 600
PHILADELPHIA, PA 19103

ISSUE	DATE	DESCRIPTION

NICTD
NORTHERN INDIANA COMMUTER TRANSPORTATION DISTRICT
33 East Highway 12
Chesterton, Indiana 46304

WEST LAKE CORRIDOR
DYER TO HAMMOND, INDIANA

DESIGNED: RSW
DRAWN: VJC
CHECKED: MP
DATE: 07/21/17

NICTD - WEST LAKE CORRIDOR - MP WL 61.38 TO WL 69.18
SINGLE TRACK

FEEDER 429 SYSTEM

FILENAME: SHT_WL_OCS_DT_429.dgn
SCALE: AS NOTED

SHEET 82 OF 248

PLOT DATE: 7/19/2017 9:30:10 PM JKJELLMA

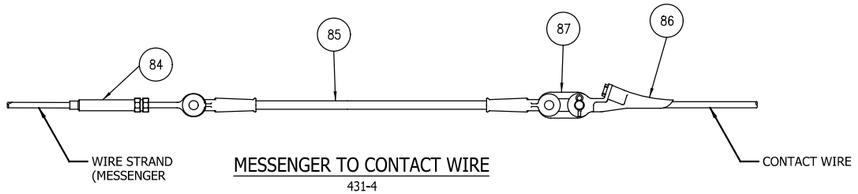

MESSENGER TO CONTACT WIRE
431-4

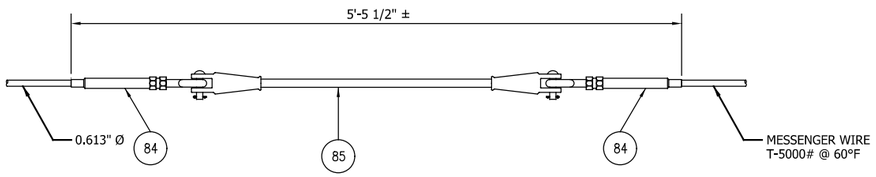

MESSENGER INSULATOR
431-2

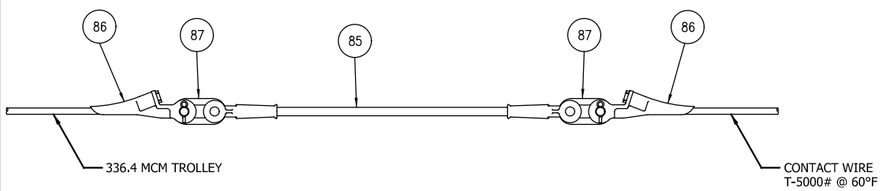

CONTACT WIRE INSULATOR
431-3

BILL OF MATERIAL FOR ASSEMBLIES 431-1, 431-2, 431-3 & 431-4						
ITEM	DESCRIPTION	VENDOR/CAT #	QUANTITY			
			431-1	431-2	431-3	431-4
83	DOUBLE BEAM SECTION INSULATOR	GOYAL INDS 63010	1	-	-	-
84	COMPRESSION EYE END FOR 0.613" DIA MESSENGER	GOYAL INDS 63077	2	2	-	1
85	CLEVIS/CLEVIS INSULATOR	GOYAL INDS 63039	1	1	1	1
86	DEAD END CLAMP FOR 336.4 MCM GROOVED WIRE	GOYAL INDS 70002-4001	-	-	2	1
87	EXTENSION LINK	GOYAL INDS 90111	-	-	2	1
17	PHILLY STRAN	GOYAL INDS 90222	AS REQ'D	-	-	-

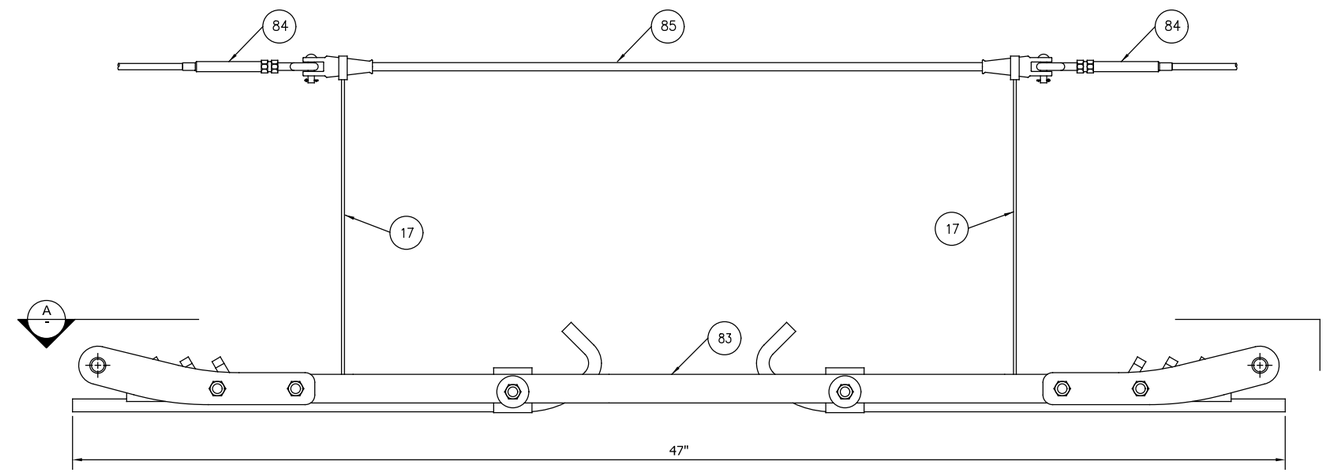

DOUBLE BEAM SECTION INSULATOR
431-1

NOTES:

1. SECTION INSULATORS IN CROSSOVERS SHALL BE INSTALLED AT A POINT EQUAL DISTANCE FROM BOTH ADJACENT TRACKS.
2. ADAPT HANGER SPACING AND LENGTHS TO ACCOMMODATE SECTION INSULATOR.
3. REFER TO LAYOUT PLANS FOR APPLICATION OF RECOMMENDED ASSEMBLY AT EACH LOCATION.
4. FOR WIRE TENSIONS AND LOADING CONDITION SEE DWG SYSGN-8, SYSGN-10, SYSGEN-11.
5. TROLLEY WIRE DEAD END MUST WITHSTAND FULL BREAKING STRENGTH OF THE TROLLEY WIRE.

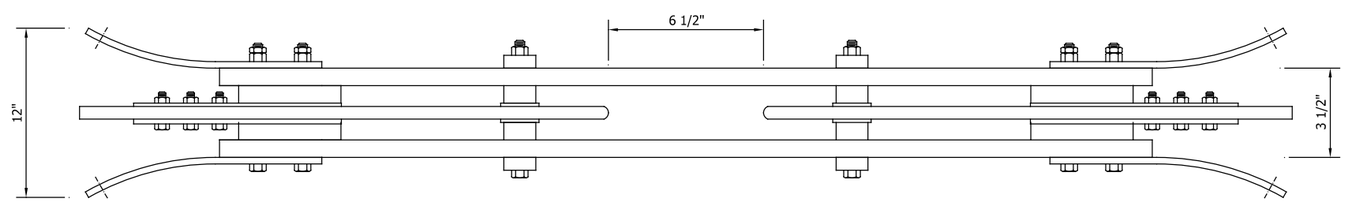

SECTION A

NOT FOR CONSTRUCTION

SERIES SYSDT-31 OF SYSDT-53

JKELLMA

PLOT DATE: 7/19/2017 9:30:19 PM

HDR Engineering, Inc.
8550 W Bryn Mawr Ave., Suite 900
Chicago, IL 60631
www.hdrinc.com

Burns
BURNS ENGINEERING, INC. | 215 979-7700
TWO COMMERCE SQUARE, 2001 MARKET ST, SUITE 600
PHILADELPHIA, PA 19103

ISSUE	DATE	DESCRIPTION

NICTD
NORTHERN INDIANA COMMUTER TRANSPORTATION DISTRICT
33 East Highway 12
Chesterton, Indiana 46304

WEST LAKE CORRIDOR
DYER TO HAMMOND, INDIANA

DESIGNED: RSW
DRAWN: VJC
CHECKED: MP
DATE: 07/21/17

NICTD - WEST LAKE CORRIDOR - MP WL 61.38 TO WL 69.18
SINGLE TRACK

SECTION INSULATOR 431 SYSTEM

FILENAME: SHT_WL_OCS_DT_431.dgn
SCALE: AS NOTED
SHEET 83 OF 248

BILL OF MATERIAL FOR ASSEMBLIES 436-1 & 436-2				
ITEM	DESCRIPTION	VENDOR/CAT #	QUANTITY	
			436-1	436-2
88	CONTACT WIRE SPLICE	GOYAL INDS 63118	1	-
89	MESSENGER WIRE SPLICE	GOYAL INDS 63126	-	1

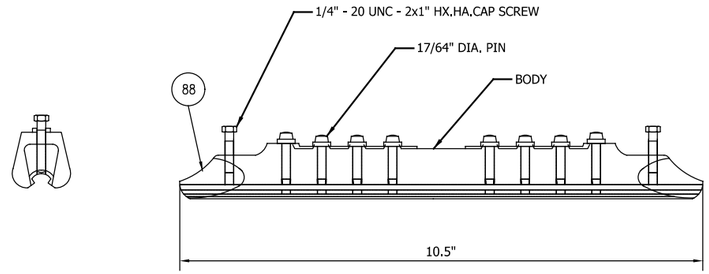

CONTACT WIRE SPLICE

436-1

NOTES:

1. INSTALL SPLICES USING TOOL DIES AS PER MANUFACTURE RECOMMENDATION.
2. SPLICES TO BE CHECKED WITH FORCE GAGE PRIOR TO ACCECPTANCE FOR MESSENGER WIRE ONLY.

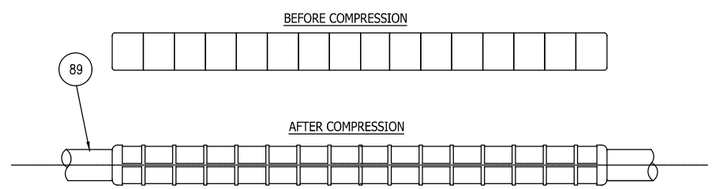

FULL TENSION MESSENGER SPLICE

436-2

(THE SPLICE SHALL DEVELOP THE FULL BREAKING STRENGTH OF MESSENGER)

JKCIELLMA

PLOT DATE: 7/19/2017 9:30:31 PM

NOT FOR CONSTRUCTION

SERIES SYSDT-32 OF SYSDT-53

HDR Engineering, Inc.
8550 W Bryn Mawr Ave., Suite 900
Chicago, IL 60631
www.hdrinc.com

Burns
BURNS ENGINEERING, INC. | 215 979-7700
TWO COMMERCE SQUARE, 2001 MARKET ST, SUITE 600
PHILADELPHIA, PA 19103

ISSUE	DATE	DESCRIPTION

NICTD
NORTHERN INDIANA COMMUTER TRANSPORTATION DISTRICT
33 East Highway 12
Chesterton, Indiana 46304

WEST LAKE CORRIDOR
DYER TO HAMMOND, INDIANA

DESIGNED: RSW
DRAWN: VJC
CHECKED: MP
DATE: 07/21/17

NICTD - WEST LAKE CORRIDOR - MP WL 61.38 TO WL 69.18
SINGLE TRACK

SPLICES 436
SYSTEM

FILENAME: SHT_WL_OCS_DT_436.dgn
SCALE: AS NOTED

SHEET 84 OF 248

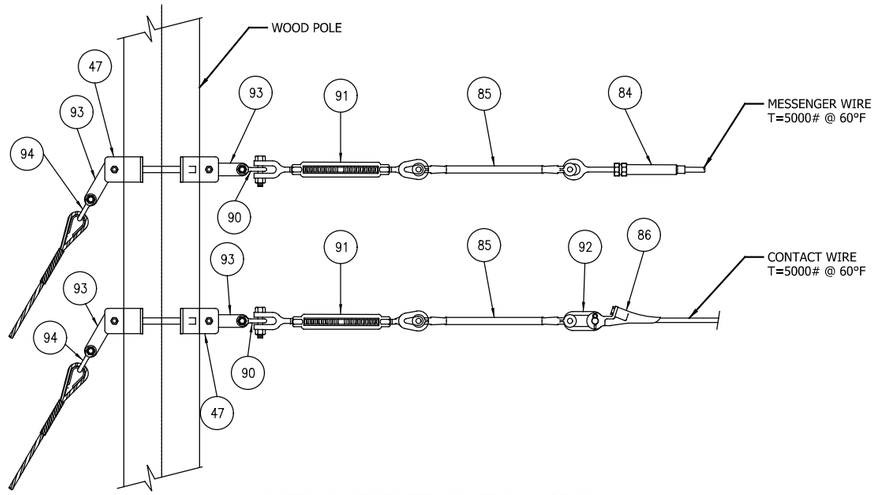

CATENARY FIXED TERMINATION ASSEMBLY

440-1 MESSENGER WIRE
440-2 CONTACT WIRE
440-5 FOR FIELD GUY-ITEMS 1, 8, & 9 ONLY

BILL OF MATERIAL FOR ASSEMBLIES 440-1, 440-2, 440-3, 440-4 & 440-5							
ITEM	DESCRIPTION	VENDOR/CAT #	QUANTITY				
			440-1	440-2	440-3	440-4	440-5
47	POLE BAND, HEAVY DUTY STEEL	GOYAL INDS 90119	1	1	-	-	1
90	CHAIN SHACKLE, BOLT TYPE, ¾" NOMINAL SIZE	GOYAL INDS 90109	1	1	-	-	-
91	TURNBUCKLE, 1" X 18", JAW/EYE	GOYAL INDS 63072	1	1	1	1	-
85	CLEVIS/CLEVIS INSULATOR	GOYAL INDS 63039	1	1	1	1	-
86	DEAD END CLAMP FOR 336.4 MCM GROOVED WIRE	GOYAL INDS 70002-4001	-	1	-	1	-
84	COMPRESSION EYE END FOR 0.613" DIA. MESSENGER	GOYAL INDS 63077	1	-	1	-	-
92	EXTENSION LINK	GOYAL INDS 90209	-	1	-	1	-
93	⅜" CONNECTING LINK	GOYAL INDS 90125	2	2	-	-	1
94	ANCHOR SHACKLE, BOLT TYPE, 1" NOMINAL SIZE	GOYAL INDS 90103	1	1	2	2	1

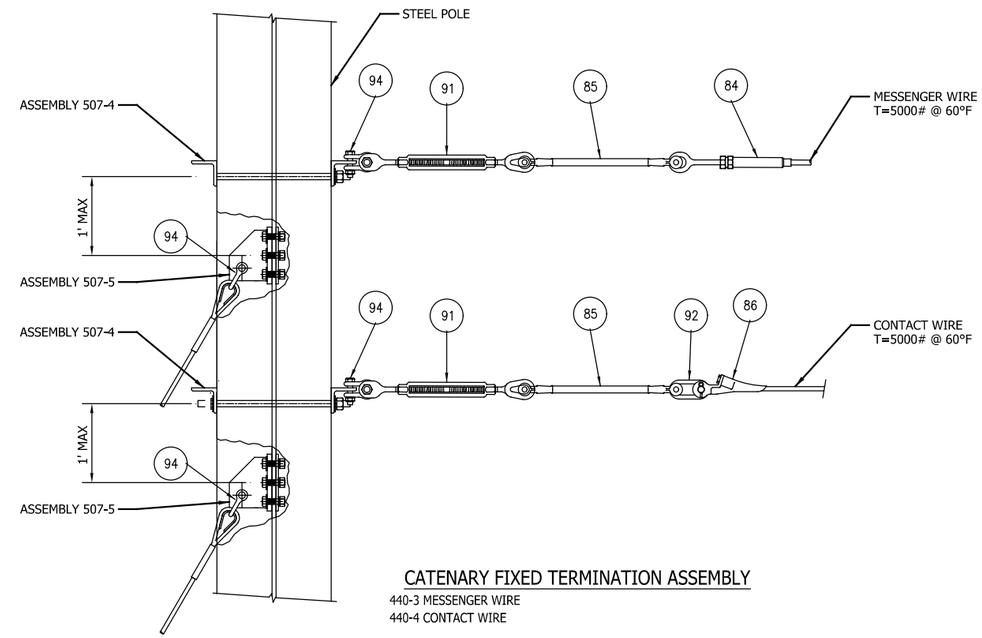

CATENARY FIXED TERMINATION ASSEMBLY

440-3 MESSENGER WIRE
440-4 CONTACT WIRE

NOTE:

1. TROLLEY WIRE DEAD END MUST WITHSTAND FULL BREAKING STRENGTH OF THE TROLLEY WIRE.

NOT FOR CONSTRUCTION

SERIES SYSDT-33 OF SYSDT-53

HDR Engineering, Inc.
8550 W Bryn Mawr Ave., Suite 900
Chicago, IL 60631
www.hdrinc.com

Burns
BURNS ENGINEERING, INC. | 215 979-7700
TWO COMMERCE SQUARE, 2001 MARKET ST, SUITE 600
PHILADELPHIA, PA 19103

ISSUE	DATE	DESCRIPTION

NICTD
NORTHERN INDIANA COMMUTER TRANSPORTATION DISTRICT
33 East Highway 12
Chesterton, Indiana 46304

WEST LAKE CORRIDOR
DYER TO HAMMOND, INDIANA

DESIGNED: RSW
DRAWN: VJC
CHECKED: MP
DATE: 07/21/17

NICTD - WEST LAKE CORRIDOR - MP WL 61.38 TO WL 69.18
SINGLE TRACK

FIXED TERMINATIONS 440 SYSTEM

FILENAME: SHT_WL_OCS_DT_440.dgn
SCALE: AS NOTED
SHEET 85 OF 248

PLOT DATE: 7/19/2017 9:30:43 PM
JKELLMA

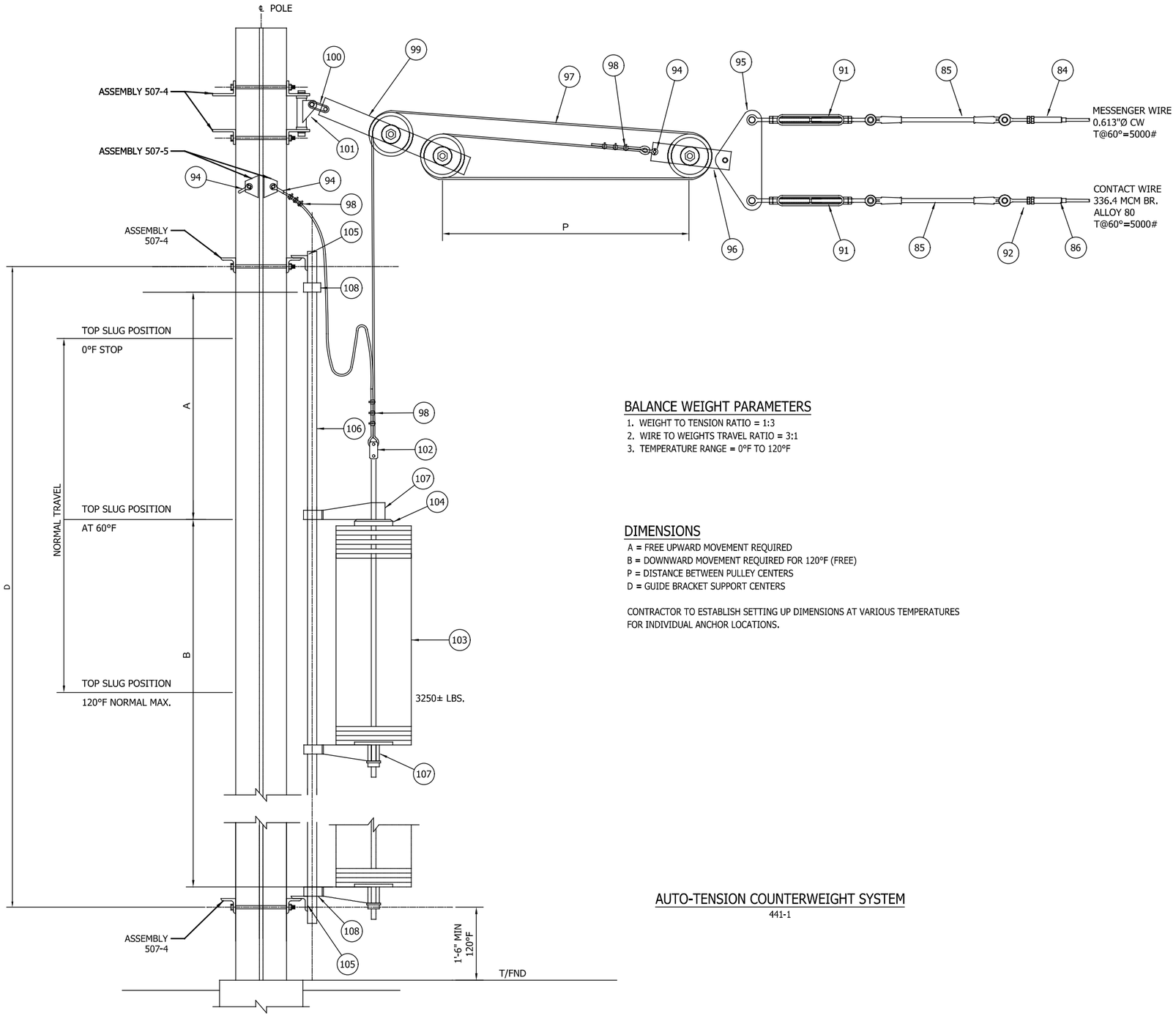

BALANCE WEIGHT PARAMETERS

1. WEIGHT TO TENSION RATIO = 1:3
2. WIRE TO WEIGHTS TRAVEL RATIO = 3:1
3. TEMPERATURE RANGE = 0°F TO 120°F

DIMENSIONS

A = FREE UPWARD MOVEMENT REQUIRED
B = DOWNWARD MOVEMENT REQUIRED FOR 120°F (FREE)
P = DISTANCE BETWEEN PULLEY CENTERS
D = GUIDE BRACKET SUPPORT CENTERS

CONTRACTOR TO ESTABLISH SETTING UP DIMENSIONS AT VARIOUS TEMPERATURES FOR INDIVIDUAL ANCHOR LOCATIONS.

AUTO-TENSION COUNTERWEIGHT SYSTEM

441-1

BILL OF MATERIAL FOR ASSEMBLY 441-1

ITEM	DESCRIPTION	VENDOR/CAT #	QUANTITY 441-1
84	COMPRESSION EYE END FOR 0.613" DIA. MESSENGER	GOYAL IND. 63077	1
85	CLEVIS/CLEVIS INSULATOR	GOYAL IND. 63039	2
86	DEAD END CLAMP FOR 336.4 MCM GROOVED WIRE	GOYAL IND. 70002-4001	1
92	EXTENSION LINK	GOYAL IND. 90209	1
91	TURNBUCKLE 1" X 18" JAW/EYE	GOYAL IND. 63072	2
95	YOKE PLATE	GOYAL IND. 62055	1
96	COUNTERWEIGHT SHEAVE	GOYAL IND. 62057	1
97	½" STAINLESS STEEL WIRE ROPE 6X19	GOYAL IND. 90234	FT
98	WIRE ROPE CLIPS	GOYAL IND. 90210	9
99	COUNTERWEIGHT SHEAVE	GOYAL IND. 62056	1
100	EXTENSION LINK PAIR	GOYAL IND. 90223	1
101	HINGE HEAVY DUTY	GOYAL IND. 62048	1
94	ANCHOR SHACKLE, BOLT TYPE, 1" NOMINAL SIZE	GOYAL IND. 90103	3
102	WEIGHT SUPPORT ROD ASSEMBLY	GOYAL IND. 62042	1
103	COUNTER WEIGHT SLUGS 50LBS. EACH, CAST IRON	GOYAL IND. 62034	65
104	INCREMENTAL WEIGHT, CAST IRON	GOYAL IND. 62053	AS REQ'D
105	GUIDE SUPPORT	GOYAL IND. 62043	2
106	GUIDE PIPE 2" SCH. 40, GALV. STEEL	-	FT
107	WEIGHT GUIDE BRACKET	GOYAL IND. 62049	2
108	TEMPERATURE STOP	GOYAL IND. 63070	2

NOTES:

1. TROLLEY WIRE DEAD END MUST WITHSTAND FULL BREAKING STRENGTH OF THE TROLLEY WIRE.
2. ANTI-SAG WIRE MUST SUPPORT THE WEIGHTS UNDER BROKEN WIRE CONDITIONS.
3. BALANCE WEIGHT, SUPPORTS AND GUIDE TO BE DEVELOPED AS AN INTEGRAL ASSEMBLY USING THE PARAMETERS AND DIMENSIONS GIVEN ON THIS DRAWING.

NOT FOR CONSTRUCTION

SERIES SYSDT-34 OF SYSDT-53

JKIELLIMA
PLOT DATE: 7/19/2017 9:30:54 PM

HDR Engineering, Inc.
8550 W Bryn Mawr Ave., Suite 900
Chicago, IL 60631
www.hdrinc.com

Burns
BURNS ENGINEERING, INC. | 215 979-7700
TWO COMMERCE SQUARE, 2001 MARKET ST, SUITE 600
PHILADELPHIA, PA 19103

ISSUE	DATE	DESCRIPTION

NICTD
NORTHERN INDIANA COMMUTER TRANSPORTATION DISTRICT
33 East Highway 12
Chesterton, Indiana 46304

WEST LAKE CORRIDOR
DYER TO HAMMOND, INDIANA

DESIGNED: RSW
DRAWN: VJC
CHECKED: MP
DATE: 07/21/17

NICTD - WEST LAKE CORRIDOR - MP WL 61.38 TO WL 69.18
SINGLE TRACK

BALANCE WEIGHT 441 SYSTEM

FILENAME SHT_WL_OCS_DT_441.dgn
SCALE AS NOTED
SHEET 86 OF 248

BILL OF MATERIAL FOR ASSEMBLIES 449-1 & 449-2			
ITEM	DESCRIPTION	VENDOR/CAT #	QUANTITY
109	SCREW TYPE TIE BACK TENSION ANCHOR	GOYAL INDS 70617	1
110	ANCHOR EXTENSION	GOYAL INDS 90211	AS REQ'D
111	THIMBLE EYE ADAPTER FOR SCREW TYPE ANCHOR	GOYAL INDS 90126	1
22	5/8" WIRE ROPE CLIPS	GOYAL INDS 90203	3
112	5/8" DIA. EHS STEEL STRAND	GOYAL INDS 90235	AS REQ'D
113	PREFORM BIG GRIP DEAD END	GOYAL INDS 90212	1
114	THIMBLE FOR 5/8" DIA. STRAND, GALV. STEEL	GOYAL INDS 90127	1
85	CLEVIS/CLEVIS INSULATOR	GOYAL INDS 63039	1

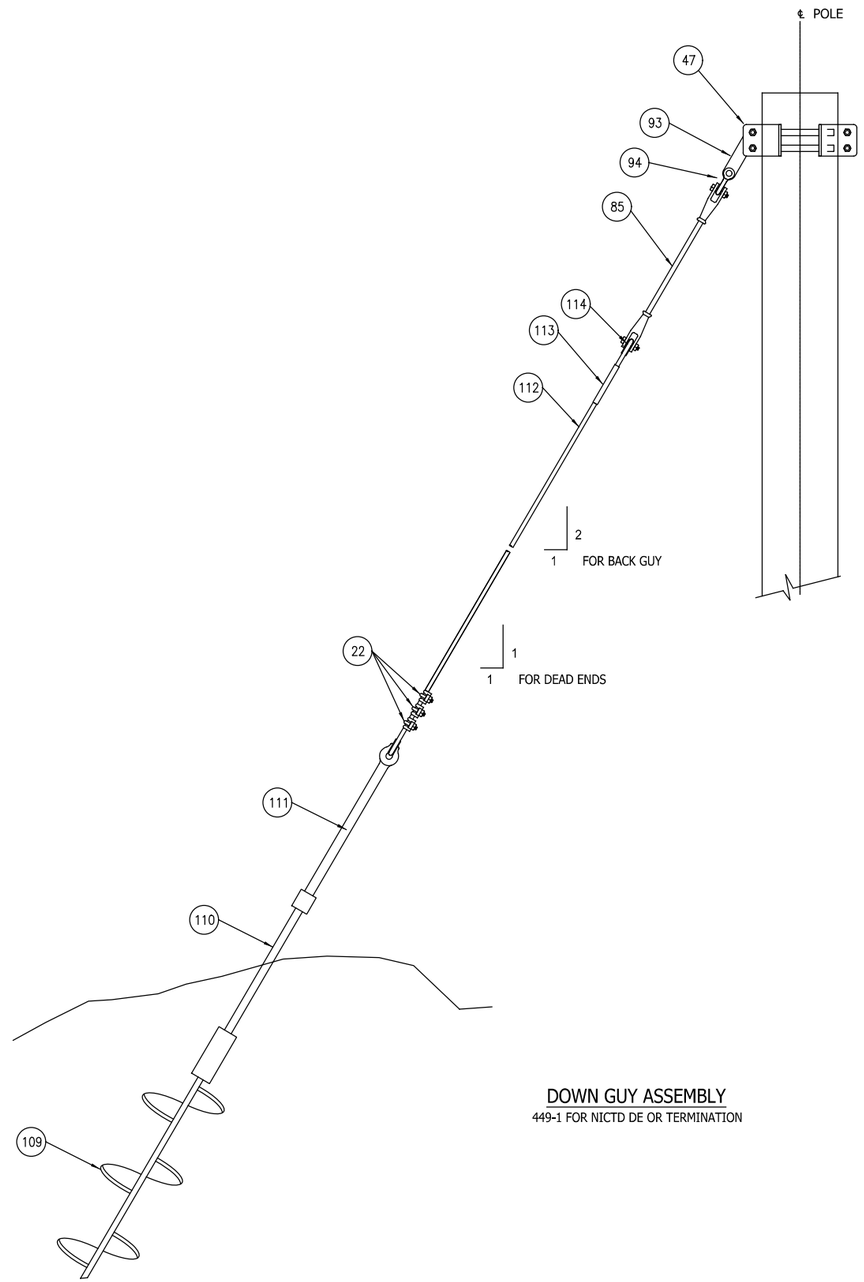

DOWN GUY ASSEMBLY
449-1 FOR NICTD DE OR TERMINATION

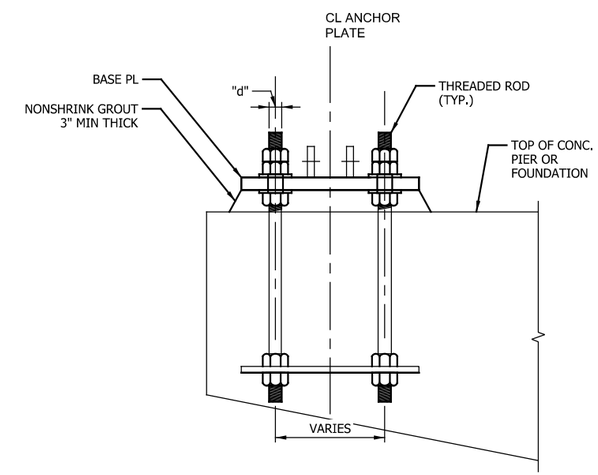

DOWN GUY ANCHOR ON PIER OR FOUNDATION
SCALE NTS

NOTES:

1. ONE GUY WIRE AND ANCHOR ASSEMBLY IS REQUIRED FOR EACH WIRE TERMINATED.
2. FOR INSTALLATION OF SCREW ANCHORS FOLLOW MANUFACTURERS RECOMMENDATIONS.
3. FOR LOCATIONS ALONG RETAINING WALLS OR AERIAL STRUCTURES, USE DOWN GUY ANCHOR PLATE ON PIER OR CAISSON FOUNDATION IN LIEU OF SCREW ANCHOR.

NOT FOR CONSTRUCTION

SERIES SYSDT-35 OF SYSDT-53

PLOT DATE: 7/19/2017 9:31:07 PM JKOELLMA

HDR Engineering, Inc.
8550 W Bryn Mawr Ave., Suite 900
Chicago, IL 60631
www.hdrinc.com

Burns
BURNS ENGINEERING, INC. | 215 979-7700
TWO COMMERCE SQUARE, 2001 MARKET ST, SUITE 600
PHILADELPHIA, PA 19103

ISSUE	DATE	DESCRIPTION

NICTD
NORTHERN INDIANA COMMUTER TRANSPORTATION DISTRICT
33 East Highway 12
Chesterton, Indiana 46304

WEST LAKE CORRIDOR
DYER TO HAMMOND, INDIANA

DESIGNED: RSW
DRAWN: VJC
CHECKED: MP
DATE: 07/21/17

NICTD - WEST LAKE CORRIDOR - MP WL 61.38 TO WL 69.18
SINGLE TRACK

DOWN GUY 449 SYSTEM

FILENAME SHT_WL_OCS_DT_449.dgn
SCALE AS NOTED
SHEET 87 OF 248

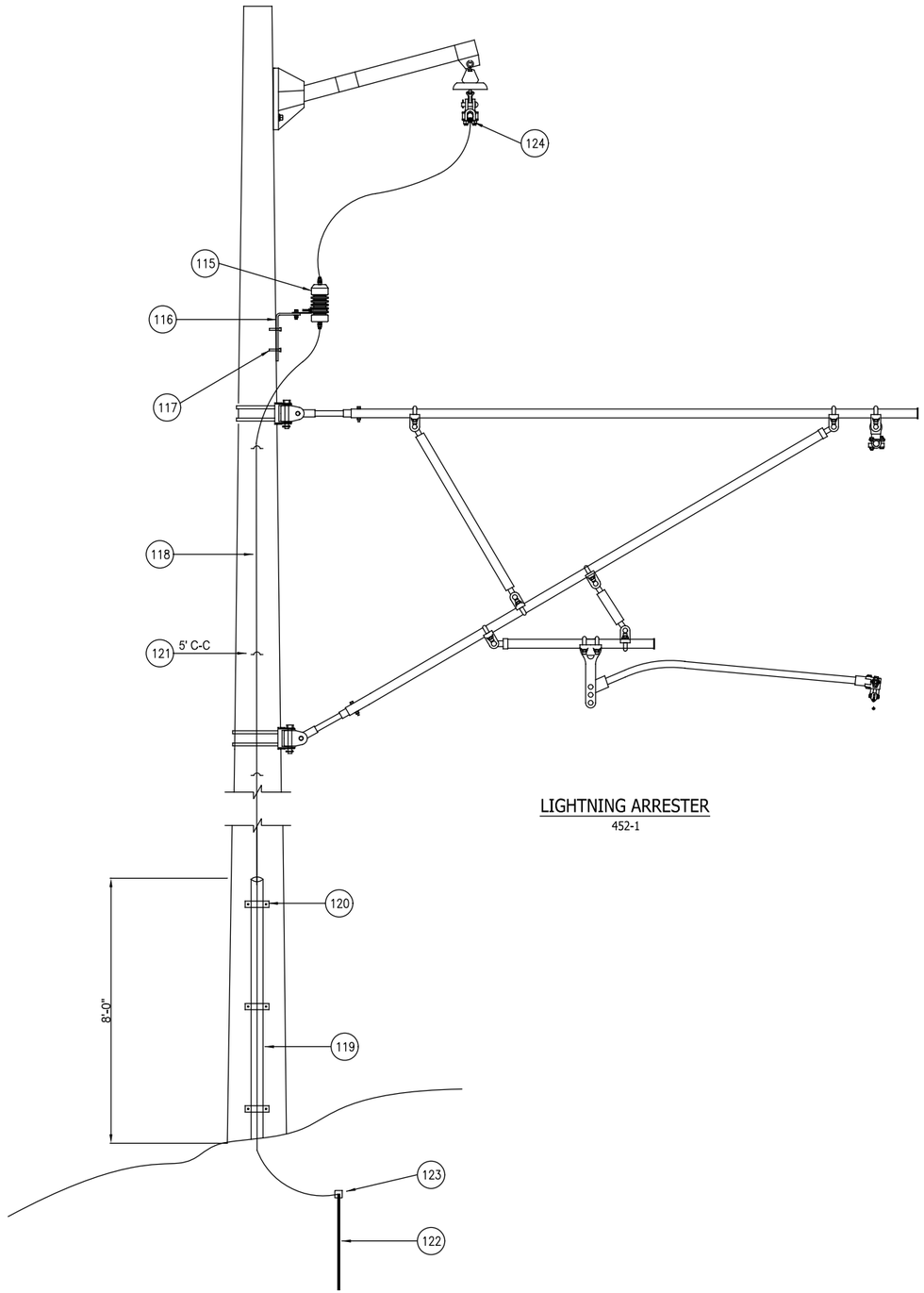

LIGHTNING ARRESTER
452-1

BILL OF MATERIAL FOR ASSEMBLY 452-1			
ITEM	DESCRIPTION	VENDOR/CAT #	QUANTITY 452-1
115	LIGHTNING ARRESTER	GOYAL INDS 90224	1
116	ARRESTER MOUNTING BRACKET	GOYAL INDS 90208	1
117	LAG SCREWS	GOYAL INDS 90226	2
118	#2, 2KV INSULATED CABLE RHW-2	-	FT
119	WIRE GUARD	CHANCE 96K6-3/4	FT
120	GUARD STRAPS	CHANCE KS-3/4	3
121	COPPER COATED STAPLES	CHANCE C205-0226	AS REQ'D
122	½"X10' COPPER CLAD GROUND ROD	-	1
123	EXOTHERMIC CONNECTION #2 TO GROUND ROD	CADWELD SBGR1141V	1
124	BRONZE PARALLEL CONNECTOR	GOYAL INDS 90131	1

NOTES:

1. INSTALL GROUND WIRE GUARD TO 8' ABOVE GROUND LINE.
2. SECURE GROUND CABLE WITH COPPER COATED STAPLES 5' C-C MAXIMUM SPACING.

NOT FOR CONSTRUCTION

SERIES SYSDT-36 OF SYSDT-53

PLOT DATE: 7/19/2017 9:31:20 PM JKIELLMA

HDR Engineering, Inc.
8550 W Bryn Mawr Ave., Suite 900
Chicago, IL 60631
www.hdrinc.com

Burns
BURNS ENGINEERING, INC. | 215 979-7700
TWO COMMERCE SQUARE, 2001 MARKET ST, SUITE 600
PHILADELPHIA, PA 19103

ISSUE	DATE	DESCRIPTION

NICTD
NORTHERN INDIANA COMMUTER TRANSPORTATION DISTRICT
33 East Highway 12
Chesterton, Indiana 46304

WEST LAKE CORRIDOR
DYER TO HAMMOND, INDIANA

DESIGNED: RSW
DRAWN: JLD
CHECKED: MP
DATE: 07/21/17

NICTD - WEST LAKE CORRIDOR - MP WL 61.38 TO WL 69.18
SINGLE TRACK

LIGHTNING ARRESTER 452 SYSTEM

FILENAME SHT_WL_OCS_DT_452.dgn
SCALE AS NOTED
SHEET 88 OF 248

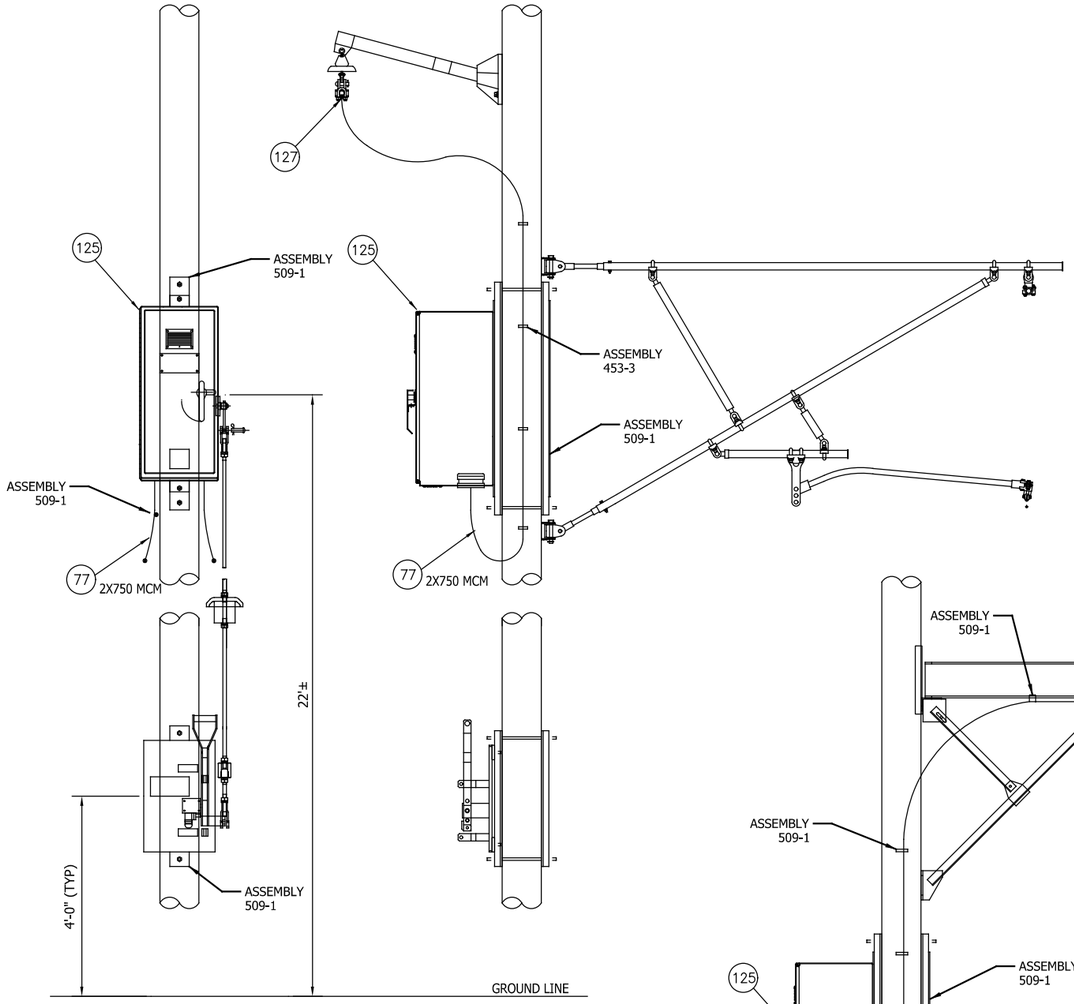

SECTIONALIZATION/TIE SWITCH
453-2 CANTILEVER STYLE

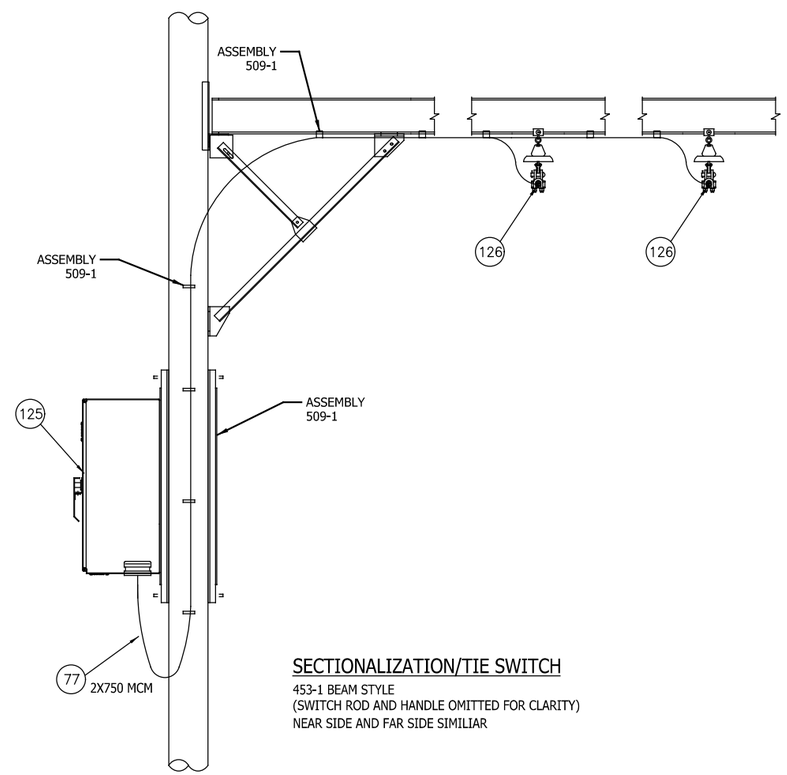

SECTIONALIZATION/TIE SWITCH
453-1 BEAM STYLE
(SWITCH ROD AND HANDLE OMITTED FOR CLARITY)
NEAR SIDE AND FAR SIDE SIMILIAR

BILL OF MATERIAL FOR ASSEMBLIES 453-1 & 453-2				
ITEM	DESCRIPTION	VENDOR/CAT #	QUANTITY	
			453-1	453-2
125	DISCONNECT SWITCH	PRINGLE D-88840	1	1
-	SWITCH MOUNTING BRACKET	ASSEMBLY 509-1	1	1
-	SWITCH HANDLE MOUNTING BRACKET	ASSEMBLY 509-2	1	1
-	CABLE SUPPORT ASSEMBLY	ASSEMBLY 453-3	6	12
77	750 MCM 2 KV INSULATED CABLE	-	FT	FT
126	PARALLEL CLAMP	DOSSERT CMC75-30-200	4	-
-	CABLE SUPPORT ASSEMBLY	ASSEMBLY 453-4	12	-
127	PARALLEL CLAMP	GOYAL INDS 70608	-	4

BILL OF MATERIAL FOR ASSEMBLIES 453-3			
ITEM	DESCRIPTION	VENDOR/CAT #	QUANTITY
			453-3
77	750 MCM 2 KV INSULATED CU CABLE	-	AS REQ'D
78	PORCELAIN CABLE CLAMP	GOYAL INDS 90220	1
79	SLOTTED TYPE H 1⅞ CHANNEL, 6" LONG	GOYAL INDS 90221	1
80	½" DIA. ANCHOR BOLT (TYP)	-	1

BILL OF MATERIAL FOR ASSEMBLIES 453-4			
ITEM	DESCRIPTION	VENDOR/CAT #	QUANTITY
			453-4
77	750 MCM 2 KV INSULATED CU CABLE	-	AS REQ'D
78	PORCELAIN CABLE CLAMP	GOYAL INDS 90220	4
79	SLOTTED TYPE H 1⅞ CHANNEL, 6" LONG	GOYAL INDS 90221	1
128	I BEAM CLAMP	GOYAL INDS 90241	2

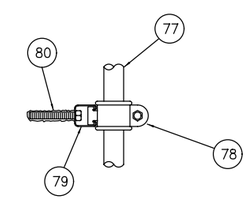

CABLE SUPPORT (5' O.C)
453-3

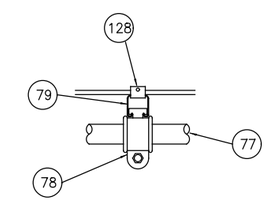

CABLE SUPPORT (5' O.C)
453-4

NOT FOR CONSTRUCTION

SERIES SYSDT-37 OF SYSDT-53

JKIELLMA

PLOT DATE: 7/19/2017 9:31:32 PM

HDR Engineering, Inc.
8550 W Bryn Mawr Ave., Suite 900
Chicago, IL 60631
www.hdrinc.com

Burns
BURNS ENGINEERING, INC. | 215 979-7700
TWO COMMERCE SQUARE, 2001 MARKET ST, SUITE 600
PHILADELPHIA, PA 19103

ISSUE	DATE	DESCRIPTION

NICTD
NORTHERN INDIANA COMMUTER TRANSPORTATION DISTRICT
33 East Highway 12
Chesterton, Indiana 46304

WEST LAKE CORRIDOR
DYER TO HAMMOND, INDIANA

DESIGNED: RSW
DRAWN: VJC
CHECKED: MP
DATE: 07/21/17

NICTD - WEST LAKE CORRIDOR - MP WL 61.38 TO WL 69.18
SINGLE TRACK

SECTIONALIZING SWITCH 453 SYSTEM

FILENAME: SHT_WL_OCS_DT_453.dgn
SCALE: AS NOTED

SHEET 89 OF 248

BILL OF MATERIAL FOR ASSEMBLY 456-1A			
ITEM	DESCRIPTION	VENDOR/CAT #	QUANTITY 456-1
129	NARROW PROFILE DEAD END ARM W/ EYE NUTS	HUGHES BRO. 28940-A48	2
131	DEAD END INSULATOR	GOYAL IND. 90136	2
132	DEAD END CLAMP	RELIABLE 61LD	2
133	#6 SOLID AWG, HD COPPER	-	AS REQ'D
136	CABLE TAP #6 TO #6	BURNDY UCG25R2R	4
138	5/8" DOUBLE ARMING BOLT HDG	-	2
139	5/8" EYE NUT HDG	-	4

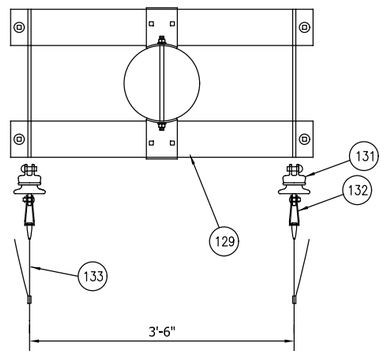

PLAN

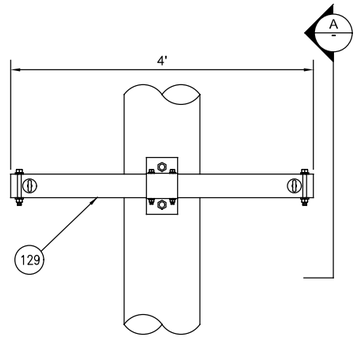

ELEVATION

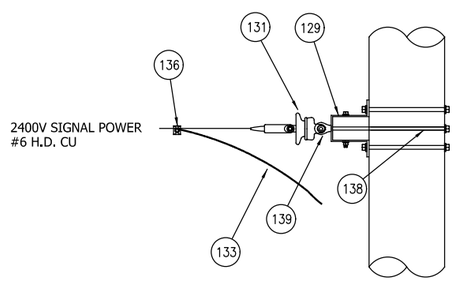

SECTION A

SIGNAL POWER DEAD END

456-1A

NOT FOR CONSTRUCTION

SERIES SYSDT-38 OF SYSDT-53

HDR Engineering, Inc.
8550 W Bryn Mawr Ave., Suite 900
Chicago, IL 60631

www.hdrinc.com

Burns

BURNS ENGINEERING, INC. | 215 979-7700
TWO COMMERCE SQUARE, 2001 MARKET ST, SUITE 600
PHILADELPHIA, PA 19103

ISSUE	DATE	DESCRIPTION

NICTD
NORTHERN INDIANA COMMUTER TRANSPORTATION DISTRICT
33 East Highway 12
Chesterton, Indiana 46304

WEST LAKE CORRIDOR
DYER TO HAMMOND, INDIANA

DESIGNED: RSW
DRAWN: VJC
CHECKED: MP
DATE: 07/21/17

NICTD - WEST LAKE CORRIDOR - MP WL 61.38 TO WL 69.18
SINGLE TRACK

SIGNAL POWER DEAD END 456 SYSTEM

FILENAME: SHT_WL_OCS_DT_456.dgn
SCALE: AS NOTED
SHEET 90 OF 248

PLOT DATE: 7/19/2017 9:31:43 PM JKJELLMA

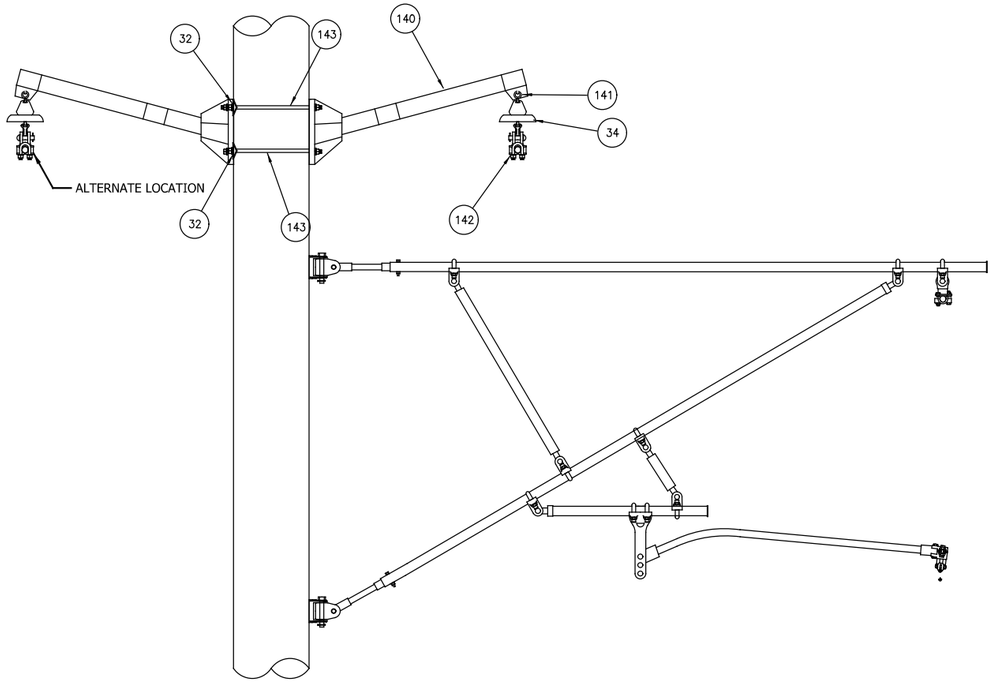

1000 MCM FEEDER SUPPORT WOOD POLE
460-1

BILL OF MATERIAL FOR ASSEMBLIES 460-1 & 460-2				
ITEM	DESCRIPTION	VENDOR/CAT #	QUANTITY	
			460-1	460-2
140	SUSPENSION BRACKET	GOYAL IND. 63045	1	1
141	BALL CLEVIS	GOYAL IND. 63061	1	1
34	SUSPENSION INSULATOR	GOYAL IND. 90122	1	1
142	SUSPENSION CLAMP	GOYAL IND. 63062	1	1
143	HEX HEAD BOLT W/ NUT (5/8")	HUGHES BRO. HB612-4	2	-
32	CURVED WASHER (4"X4")	GOYAL IND. 90202	2	-
144	1 5/8"X1 5/8" 12 GA STRUT	B-LINE B22	-	FT
145	5/8"X1 3/4" HEX HEAD BOLT	HUGHES BRO. HB61-3/4-1-1/4	-	4
146	5/8" SPRING NUT	B-LINE N255	-	4
147	BEAM CLAMP W/ SET SCREW	B-LINE B212-3/8	-	4

NOTES:

1. LOCATION OF FEEDER TO BE DETERMINED IN THE FIELD BASED ON NESC CLEARANCES.
2. ADJUST THE HEIGHT OF OTHER NICTD APPURTENANCES AS REQUIRED.

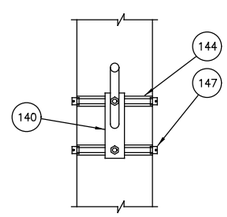

SECTION A

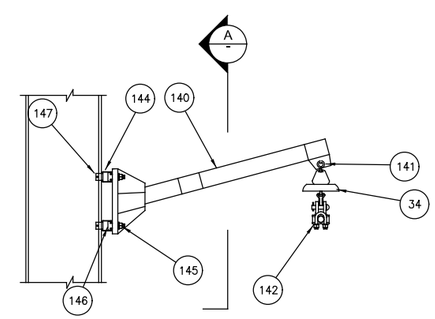

1000 MCM FEEDER SUPPORT STEEL POLE
460-2

NOT FOR CONSTRUCTION

SERIES SYSDT-39 OF SYSDT-53

JKIELLMA

PLOT DATE: 7/19/2017 9:31:52 PM

HDR Engineering, Inc.
8550 W Bryn Mawr Ave., Suite 900
Chicago, IL 60631
www.hdrinc.com

Burns
BURNS ENGINEERING, INC. | 215 979-7700
TWO COMMERCE SQUARE, 2001 MARKET ST, SUITE 600
PHILADELPHIA, PA 19103

ISSUE	DATE	DESCRIPTION

NICTD
NORTHERN INDIANA COMMUTER TRANSPORTATION DISTRICT
33 East Highway 12
Chesterton, Indiana 46304

WEST LAKE CORRIDOR
DYER TO HAMMOND, INDIANA

DESIGNED: RSW
DRAWN: VJC
CHECKED: MP
DATE: 07/21/17

NICTD - WEST LAKE CORRIDOR - MP WL 61.38 TO WL 69.18
SINGLE TRACK

FEEDER SUPPORT 460 SYSTEM

FILENAME SHT_WL_OCS_DT_460.dgn
SCALE AS NOTED
SHEET 91 OF 248

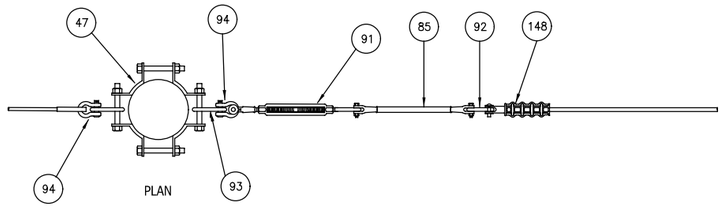

PLAN

BILL OF MATERIAL FOR ASSEMBLIES 461-1, 461-2 & 461-3					
ITEM	DESCRIPTION	VENDOR/CAT #	QUANTITY		
			461-1	461-2	461-3
47	POLE BAND, HEAVY DUTY STEEL	GOYAL IND. 90119	1	1	-
93	⅜" CONNECTING LINK	GOYAL IND. 90125	2	2	-
91	TURNBUCKLE, 1"X18" JAW/EYE	GOYAL IND. 63072	2	1	-
94	ANCHOR SHACKLE, BOLT TYPE, 1" NOMINAL SIZE	GOYAL IND. 90103	2	2	-
85	CLEVIS/CLEVIS INSULATOR	GOYAL IND. 63039	2	1	1
92	EXTENSION LINK	GOYAL IND. 90104	2	1	2
148	DEAD END CLAMP	GOYAL IND. 70613	2	1	2
127	PARALLEL CLAMP	GOYAL IND. 70608	1	-	-
-	SUPPORT ASSEMBLY	ASSEMBLY 460-1	1	-	-

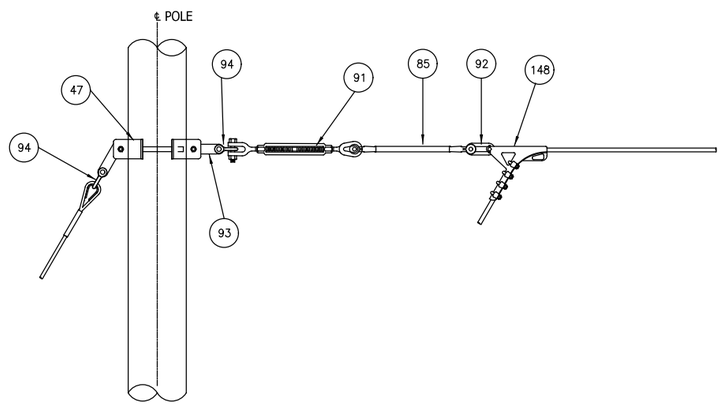

ELEVATION

FEEDER DEAD END

461-2 TO DEAD END

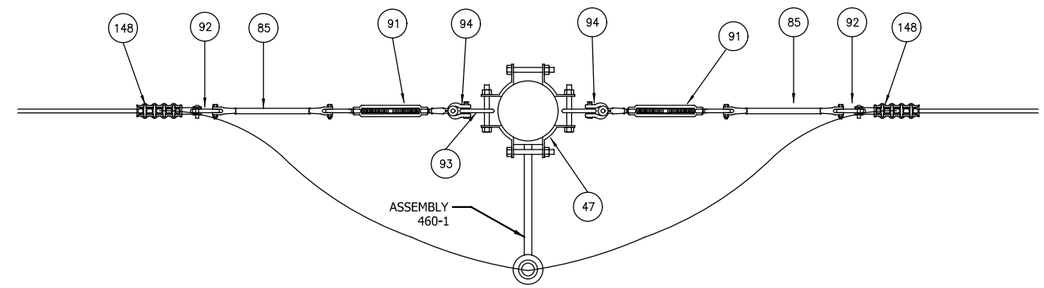

PLAN

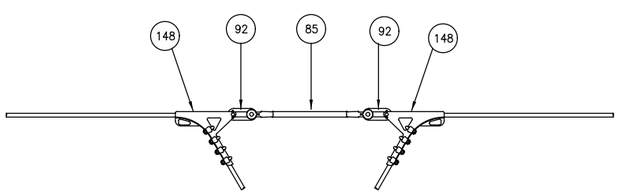

FEEDER TO FEEDER INSULATOR

461-3

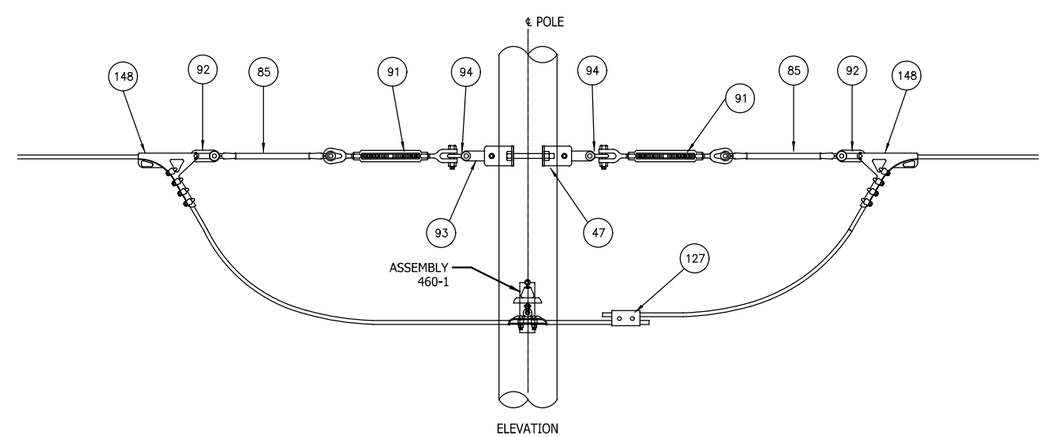

ELEVATION

FEEDER DEAD END

461-1 FEED THROUGH

NOT FOR CONSTRUCTION

SERIES SYSDT-40 OF SYSDT-53

JKIELLMA

PLOT DATE: 7/19/2017 9:32:01 PM

HDR Engineering, Inc.
8550 W Bryn Mawr Ave., Suite 900
Chicago, IL 60631

www.hdrinc.com

Burns

BURNS ENGINEERING, INC. | 215 979-7700
TWO COMMERCE SQUARE, 2001 MARKET ST, SUITE 600
PHILADELPHIA, PA 19103

ISSUE	DATE	DESCRIPTION

NICTD

NORTHERN INDIANA COMMUTER TRANSPORTATION DISTRICT
33 East Highway 12
Chesterton, Indiana 46304

WEST LAKE CORRIDOR

DYER TO HAMMOND, INDIANA

DESIGNED: RSW
DRAWN: JLD
CHECKED: MP
DATE: 07/21/17

NICTD - WEST LAKE CORRIDOR - MP WL 61.38 TO WL 69.18
SINGLE TRACK

FEEDER DEADENDS 461 SYSTEM

FILENAME SHT_WL_OCS_DT_461.dgn

SCALE AS NOTED

SHEET 92 OF 248

BILL OF MATERIAL FOR ASSEMBLIES 462-1, 462-2 & 462-3					
ITEM	DESCRIPTION	VENDOR/CAT #	QUANTITY		
			462-1	462-2	462-3
81	500 MCM SUPERFLEX BARE CU. CABLE	-	FT	FT	-
127	PARALLEL CLAMP	GOYAL IND. 70608	1	1	1
73	PARALLEL CLAMP	GOYAL IND. 70607	1	1	-
-	SUPPORT ARM	ASSEMBLY 460-1	-	1	-
149	500 MCM 2KV INSULATED CABLE	-	-	-	AS REQ'D
150	CABLE STRAP	GOYAL IND. 90247	-	-	1' C-C
72	TROLLEY CONTACT CLAMP 500 MCM - 335 MCM GROOVED	GOYAL IND. 63099	-	-	1
151	CABLE DROP SUPPORT	GOYAL IND. 90248	-	-	2

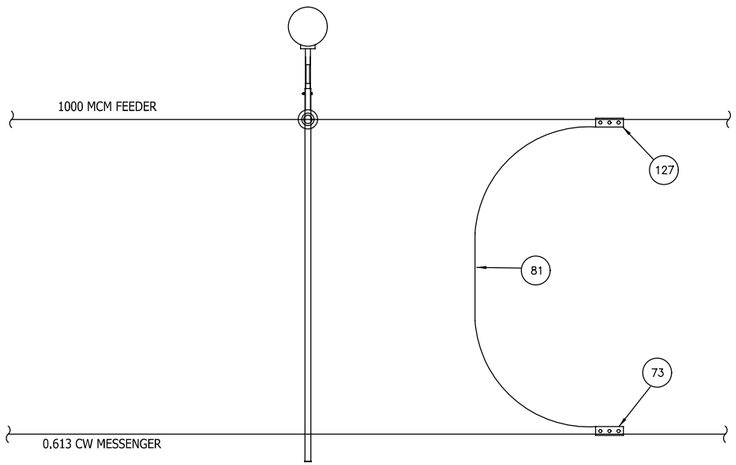

FEEDER TAP
462-1

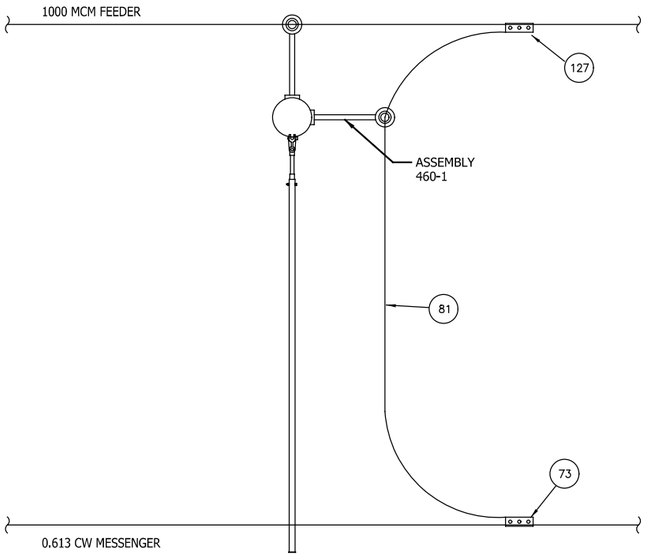

FEEDER TAP
462-2

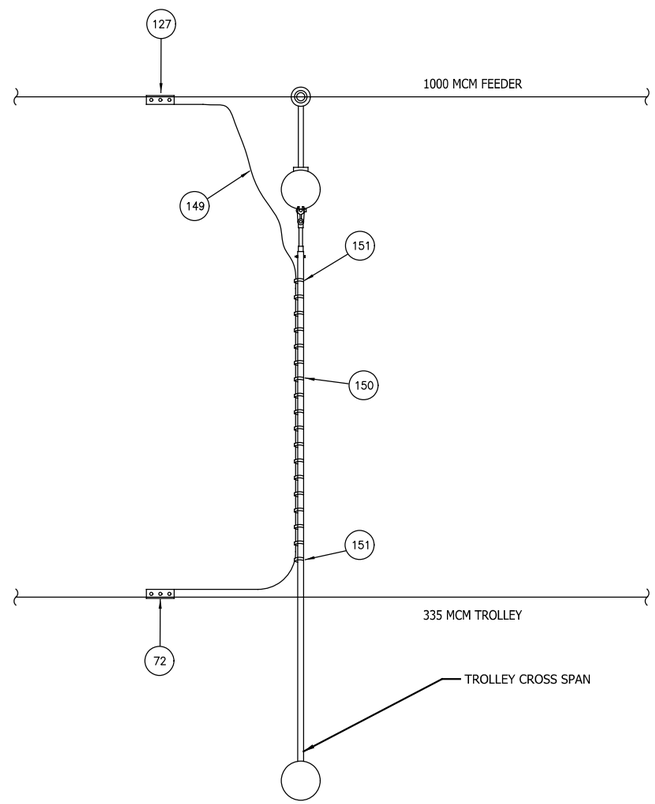

FEEDER TAP
462-3

JKIELLMA

PLOT DATE: 7/19/2017 9:32:12 PM

NOT FOR CONSTRUCTION

SERIES SYSDT-41 OF SYSDT-53

HDR Engineering, Inc.
8550 W Bryn Mawr Ave., Suite 900
Chicago, IL 60631
www.hdrinc.com

Burns
BURNS ENGINEERING, INC. | 215 979-7700
TWO COMMERCE SQUARE, 2001 MARKET ST, SUITE 600
PHILADELPHIA, PA 19103

ISSUE	DATE	DESCRIPTION

NICTD
NORTHERN INDIANA COMMUTER TRANSPORTATION DISTRICT
33 East Highway 12
Chesterton, Indiana 46304

WEST LAKE CORRIDOR
DYER TO HAMMOND, INDIANA

DESIGNED: RSW
DRAWN: VJC
CHECKED: MP
DATE: 07/21/17

NICTD - WEST LAKE CORRIDOR - MP WL 61.38 TO WL 69.18
SINGLE TRACK

FEEDER TAPS 462 SYSTEM

FILENAME: SHT_WL_OCS_DT_462.dgn
SCALE: AS NOTED

SHEET 93 OF 248

BILL OF MATERIAL FOR ASSEMBLY 463-1			
ITEM	DESCRIPTION	VENDOR/CAT #	QUANTITY 463-1
-	FEEDER DEAD END	ASSEMBLY 461-2	2
-	DOWN GUY	ASSEMBLY 449-1	2
77	2X750 MCM, 2KV INSULATED CABLE	-	AS REQ'D
-	BUS BAR ASSEMBLY	ASSEMBLY 429-4	4
127	PARALLEL CLAMP	-	4
152	TAP-BUS TO CABLE	-	4
153	BUS ANGLE COUPLER	-	2
74	2" Ø BUS BAR, COPPER	-	AS REQ'D

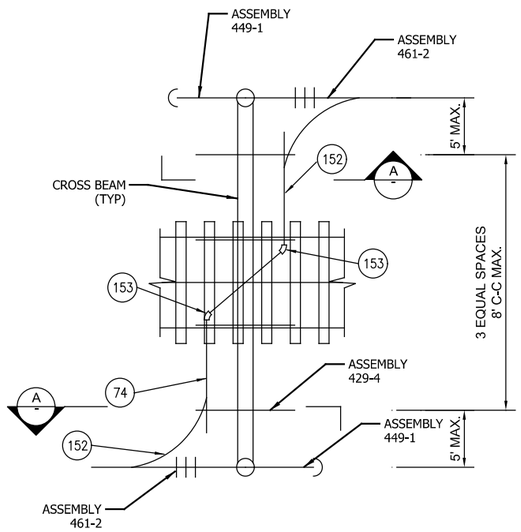

FEEDER TRANSITION
FROM SIDE POLE TO SIDE POLE
OR SIDE POLE TO CENTER POLE
463-1

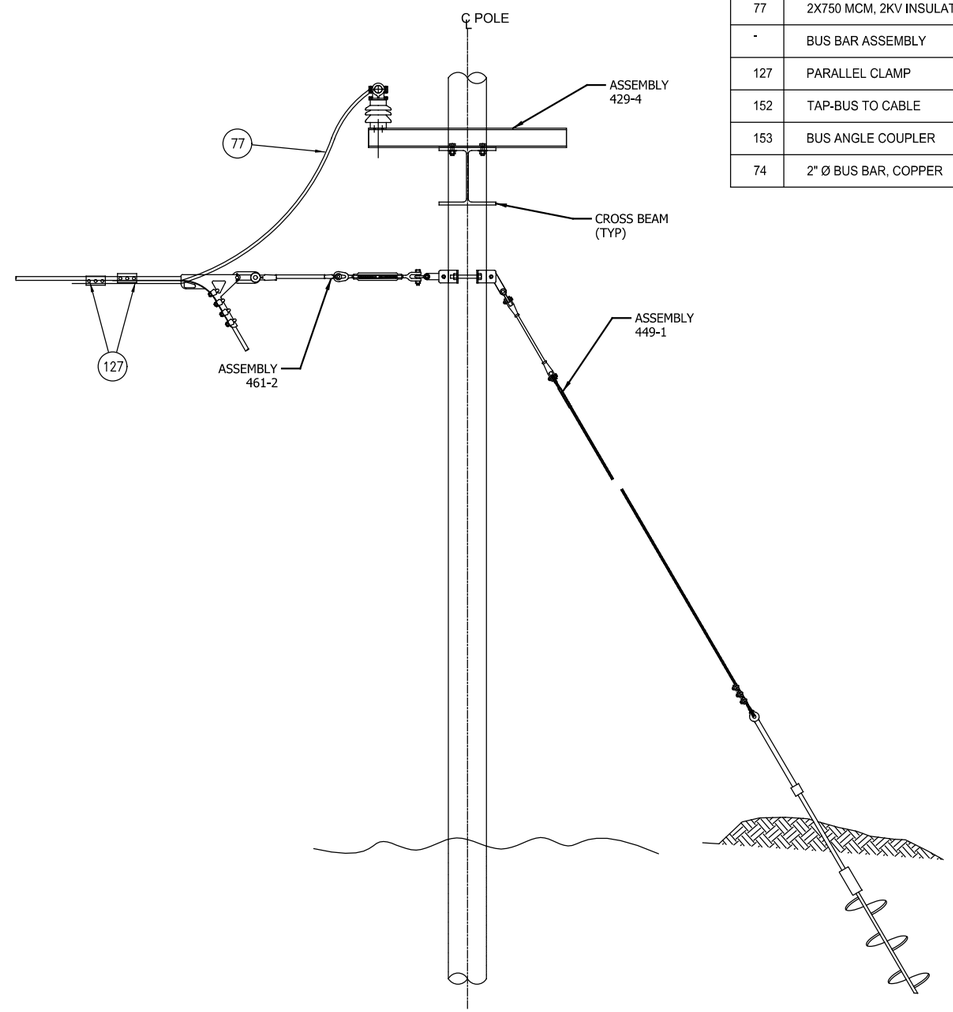

SECTION A

NOT FOR CONSTRUCTION

SERIES SYSDT-42 OF SYSDT-53

JKIELMA

PLOT DATE: 7/19/2017 9:32:22 PM

HDR Engineering, Inc.
8550 W Bryn Mawr Ave., Suite 900
Chicago, IL 60631
www.hdrinc.com

Burns
BURNS ENGINEERING, INC. | 215 979-7700
TWO COMMERCE SQUARE, 2001 MARKET ST, SUITE 600
PHILADELPHIA, PA 19103

ISSUE	DATE	DESCRIPTION

NICTD
NORTHERN INDIANA COMMUTER TRANSPORTATION DISTRICT
33 East Highway 12
Chesterton, Indiana 46304

WEST LAKE CORRIDOR
DYER TO HAMMOND, INDIANA

DESIGNED: RSW
DRAWN: VJC
CHECKED: MP
DATE: 07/21/17

NICTD - WEST LAKE CORRIDOR - MP WL 61.38 TO WL 69.18
SINGLE TRACK

FEEDER DEADEND 463 SYSTEM

FILENAME: SHT_WL_OCS_DT_463.dgn
SCALE: AS NOTED

SHEET 94 OF 248

NOTES:

1. FOR GENERAL NOTES ABBREVIATIONS AND SYMBOLS SEE DRAWINGS SYSGN-1 THROUGH SYSGN-4.
2. POLE REFERANCE = 500-XX WHERE XX IS POLE LENGTH IN FT.

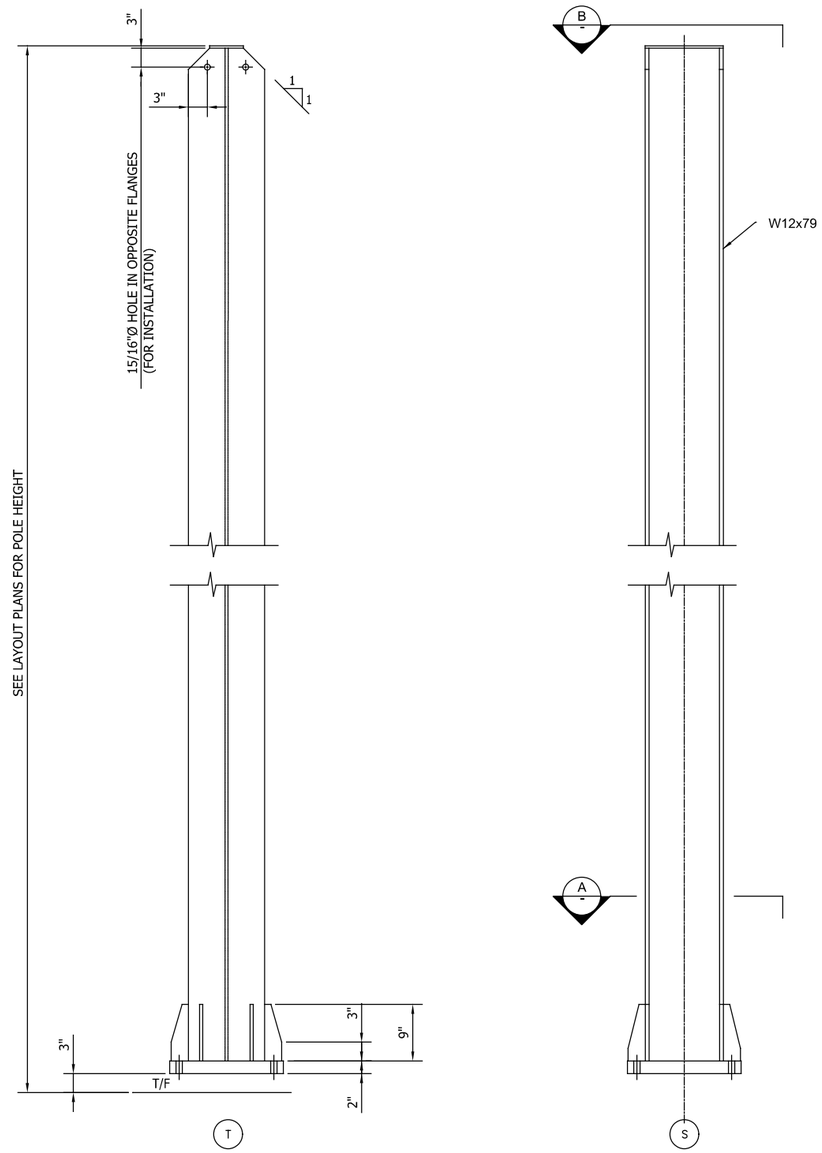

STEEL POLE
SCALE 1"=1'-0"
500-XX

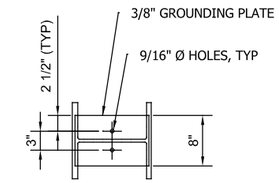

SECTION B

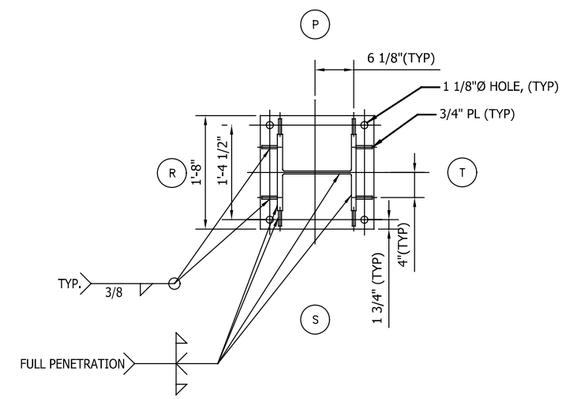

SECTION A

NOT FOR CONSTRUCTION

SERIES SYSDT-43 OF SYSDT-53

JKIELLMA

PLOT DATE: 7/19/2017 9:32:31 PM

HDR Engineering, Inc.
8550 W Bryn Mawr Ave., Suite 900
Chicago, IL 60631
www.hdrinc.com

Burns
BURNS ENGINEERING, INC. | 215 979-7700
TWO COMMERCE SQUARE, 2001 MARKET ST, SUITE 600
PHILADELPHIA, PA 19103

ISSUE	DATE	DESCRIPTION

NICTD
NORTHERN INDIANA COMMUTER TRANSPORTATION DISTRICT
33 East Highway 12
Chesterton, Indiana 46304

WEST LAKE CORRIDOR
DYER TO HAMMOND, INDIANA

DESIGNED:	RSW
DRAWN:	VJC
CHECKED:	MP
DATE:	07/21/17

NICTD - WEST LAKE CORRIDOR - MP WL 61.38 TO WL 69.18
SINGLE TRACK

STEEL POLE BWA 500 SYSTEM

FILENAME	SHT_WL_OCS_DT_500.dgn	SHEET 95 OF 248
SCALE	AS NOTED	

POLE ASSEMBLY TABLE										
POLE TYPE	SHAFT SIZE	BASE PLATE				WELDING DIMENSIONS			ALLOWABLE MOMENT	REMARKS
		A	BC	Tb	d	W1	W2	K	MOMENT	
		(INCHES)							(K-FT)	
501-1-XX	W10x39	18"	18"	1 1/4"	2"	7/16"	3/8"	1 1/16"	44.7	
501-2-XX	W10x49	20"	20"	1 1/2"	TBD	1/2"	3/8"	1 3/16"	61.9	
501-3-XX	W12x53	20"	20"	1 1/2"	TBD	1/2"	3/8"	1 3/16"	73.2	
501-4-XX	W12x72	24"	24"	2"	TBD	9/16"	1/2"	1 3/8"	114	

XX DENOTES LENGTH OF POLE IN FT IN POLE TYPE DESIGNATION.

NOTES:

1. WELDING AT THE BASE SHALL BE CONTINUOUS, EXCEPT AS DEFINED IN DETAIL 3, ALONG THE PERIMETER OF THE CROSS SECTION OF THE POLE.
2. FOR POLE LENGTHS SEE OCS LAYOUT PLAN AND SCHEDULE DRAWING.
3. ANY ADDITIONAL HOLES REQUIRED BY CONTRACTOR ARE DETAILED BY CONTRACTOR, AND MADE BY POLE MANUFACTURER PRIOR to GALVANIZING. NO FIELD HOLE DRILLING ALLOWED.

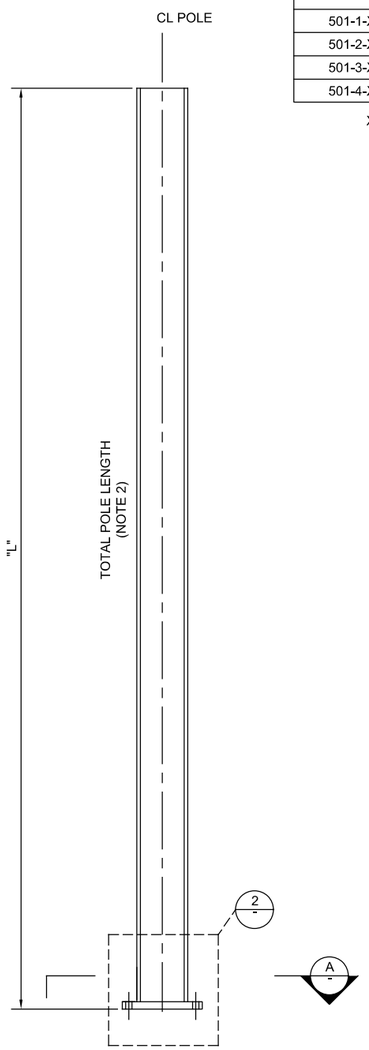

WIDE FLANGE POLE
SCALE NTS
SEE NOTE 3
501-X

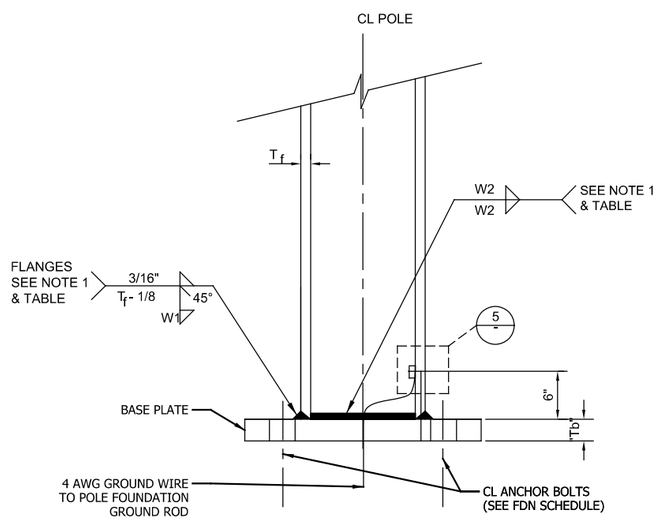

DETAIL 2
SCALE NTS

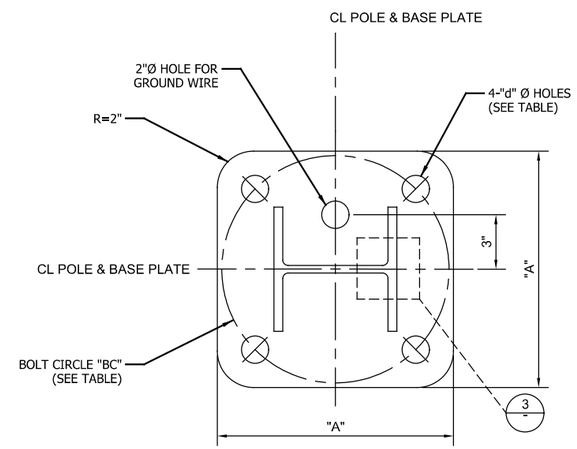

SECTION A
SCALE NTS

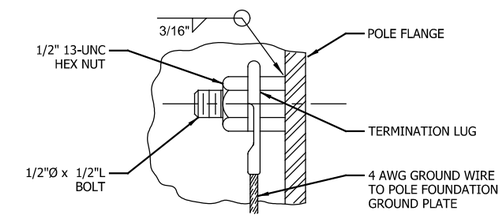

DETAIL 5
SCALE NTS

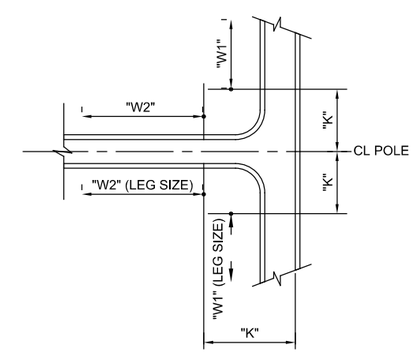

FLANGE TO BASE PLATE WELDING

DETAIL 3
SCALE NTS

JKJELLMA

PLOT DATE: 7/19/2017 9:32:42 PM

NOT FOR CONSTRUCTION

SERIES SYSDT-44 OF SYSDT-53

HDR Engineering, Inc.
8550 W Bryn Mawr Ave., Suite 900
Chicago, IL 60631
www.hdrinc.com

Burns
BURNS ENGINEERING, INC. | 215 979-7700
TWO COMMERCE SQUARE, 2001 MARKET ST, SUITE 600
PHILADELPHIA, PA 19103

ISSUE	DATE	DESCRIPTION

NICTD
NORTHERN INDIANA COMMUTER TRANSPORTATION DISTRICT
33 East Highway 12
Chesterton, Indiana 46304

WEST LAKE CORRIDOR
DYER TO HAMMOND, INDIANA

DESIGNED:	RSW
DRAWN:	VJC
CHECKED:	MP
DATE:	07/21/17

NICTD - WEST LAKE CORRIDOR - MP WL 61.38 TO WL 69.18
SINGLE TRACK

STEEL POLE AERIAL 501 SYSTEM

FILENAME	SHT_WL_OCS_DT_501.dgn	SHEET 96 OF 248
SCALE	AS NOTED	

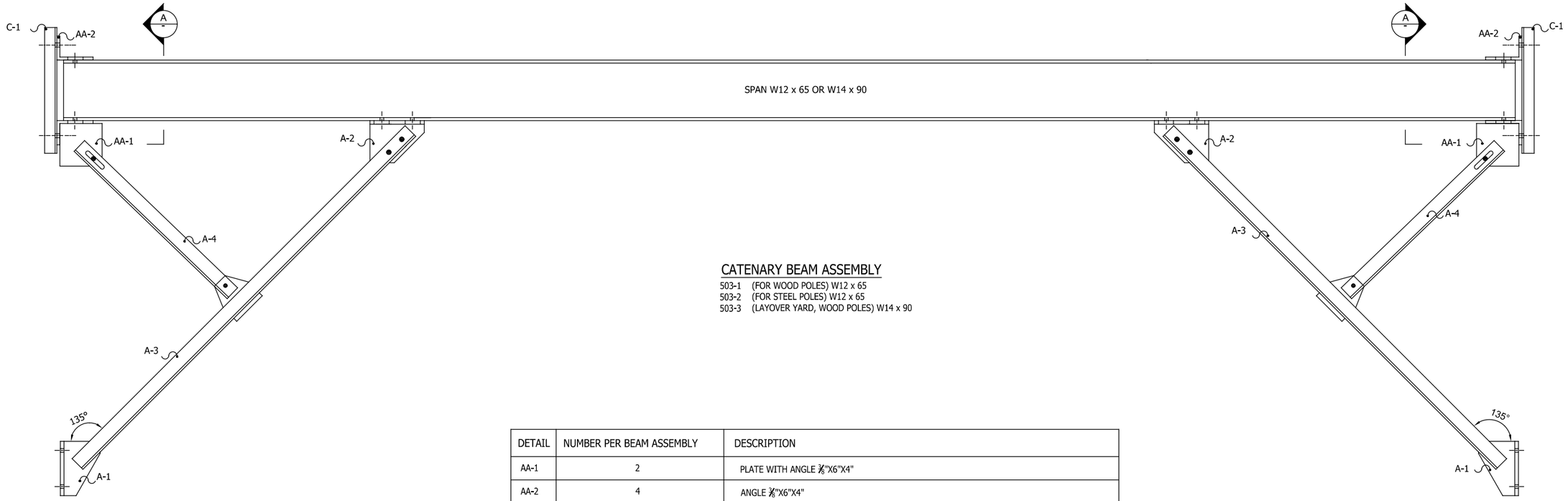

CATENARY BEAM ASSEMBLY

503-1 (FOR WOOD POLES) W12 x 65
503-2 (FOR STEEL POLES) W12 x 65
503-3 (LAYOVER YARD, WOOD POLES) W14 x 90

DETAIL	NUMBER PER BEAM ASSEMBLY	DESCRIPTION
AA-1	2	PLATE WITH ANGLE 3/8"X6"X4"
AA-2	4	ANGLE 3/8"X6"X4"
A-1	2	LOWER PLATE 5/8" ℄
A-2	2	UPPER PLATE 5/8" ℄
A-3	4	ANGLE 2 1/2"X2 1/2"X9/16" LENGTH 6'-6" WITH 5/8"X6"X6 3/4" PLATE BETWEEN BOTH ANGLES
A-4	2	ANGLE 2 1/2"X2 1/2"X9/16" LENGTH 2'-10 3/4"
C-1	2	CHANNEL FOR W12X65 BEAM, C6X10.5 WITH 1'-5" SPACING BETWEEN HOLES
	24	HEX HEAD BOLT & NUT A325 TYPE 3, 5/8"X2 1/4"
	24	FLAT WASHERS, 5/8" A325

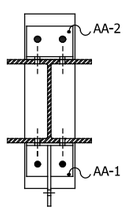

SECTION A

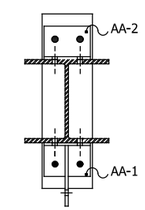

SECTION A

NOT FOR CONSTRUCTION

SERIES SYSDT-45 OF SYSDT-53

JKIELLMA

PLOT DATE: 7/19/2017 9:32:53 PM

HDR Engineering, Inc.
8550 W Bryn Mawr Ave., Suite 900
Chicago, IL 60631
www.hdrinc.com

Burns
BURNS ENGINEERING, INC. | 215 979-7700
TWO COMMERCE SQUARE, 2001 MARKET ST, SUITE 600
PHILADELPHIA, PA 19103

ISSUE	DATE	DESCRIPTION

NICTD
NORTHERN INDIANA COMMUTER TRANSPORTATION DISTRICT
33 East Highway 12
Chesterton, Indiana 46304

WEST LAKE CORRIDOR
DYER TO HAMMOND, INDIANA

DESIGNED:	RSW
DRAWN:	VJC
CHECKED:	MP
DATE:	07/21/17

NICTD - WEST LAKE CORRIDOR - MP WL 61.38 TO WL 69.18
SINGLE TRACK

PORTAL BEAM 503 SYSTEM

FILENAME	SHT_WL_OCS_DT_503.dgn	SHEET 97 OF 248
SCALE	AS NOTED	

NOTES:

1. VARIATION IN DISTANCE BETWEEN SUPPORT POLES LENGTH DOES NOT CHANGE LOCATION OF HOLES IN I-BEAMS FOR FASTENING SEAT Ls OR KNEE BRACES.
2. MARK LENGTH ON EACH SIDE OF WEB BEFORE SHIPMENT.
3. 5/8" SPACING IN KNEE BRACE ASSEMBLY REQUIRED TO PERMIT ATTACHMENT OF STEADY STRAIN OR PULL-OFFS IN FIELD.

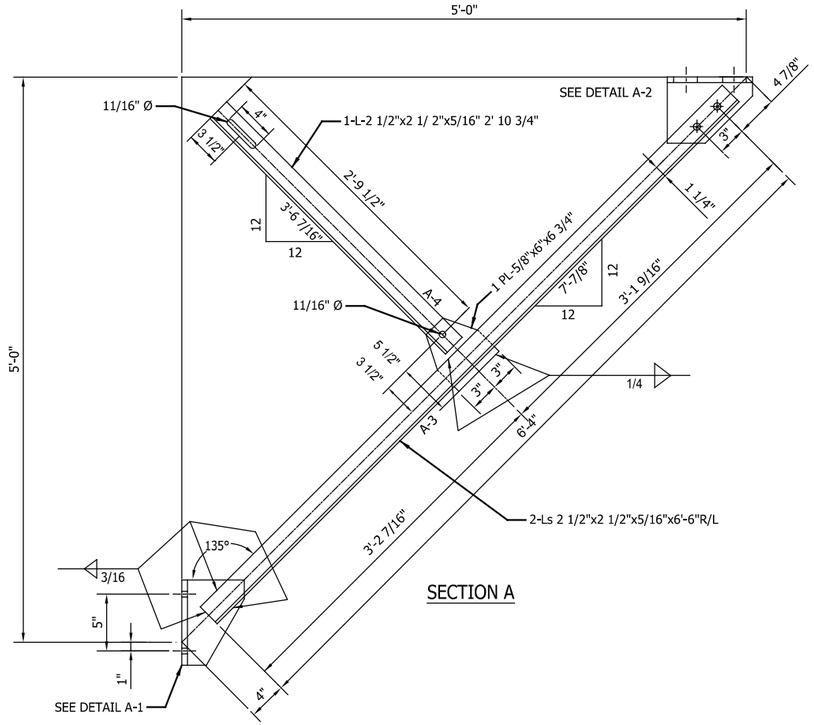

SECTION A

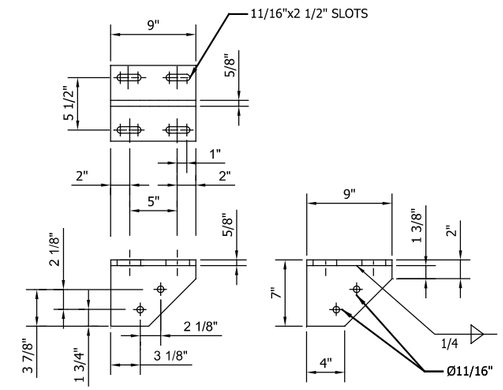

DETAIL A-2

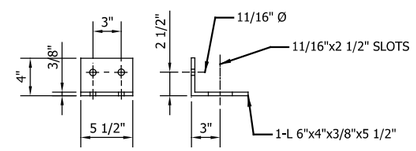

DETAIL AA-2

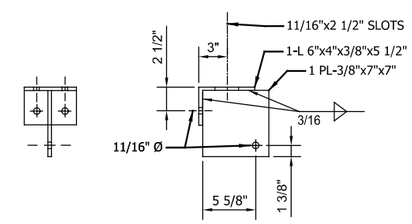

DETAIL AA-1

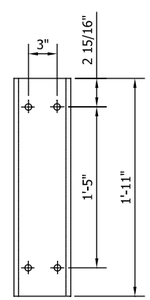

NOTE: ALL HOLES 11/16" Ø

DETAIL C-1

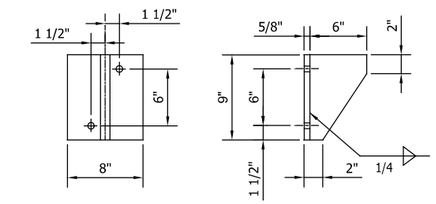

1 PL- 5/8"x8"x9" W 11/16" Ø HOLES

DETAIL A-1

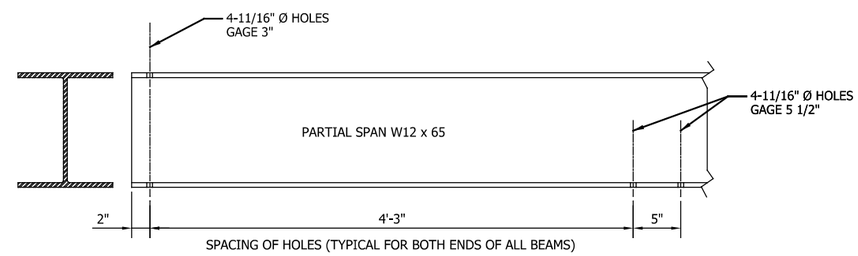

KNEE BRACE FOR BEAM

504-1

NOT FOR CONSTRUCTION

SERIES SYSDT-46 OF SYSDT-53

HDR Engineering, Inc.
8550 W Bryn Mawr Ave., Suite 900
Chicago, IL 60631
www.hdrinc.com

Burns
BURNS ENGINEERING, INC. | 215 979-7700
TWO COMMERCE SQUARE, 2001 MARKET ST, SUITE 600
PHILADELPHIA, PA 19103

ISSUE	DATE	DESCRIPTION

NICTD
NORTHERN INDIANA COMMUTER TRANSPORTATION DISTRICT
33 East Highway 12
Chesterton, Indiana 46304

WEST LAKE CORRIDOR
DYER TO HAMMOND, INDIANA

DESIGNED:	RSW
DRAWN:	VJC
CHECKED:	MP
DATE:	07/21/17

NICTD - WEST LAKE CORRIDOR - MP WL 61.38 TO WL 69.18
SINGLE TRACK

PORTAL DETAILS 504 SYSTEM

FILENAME	SHT_WL_OCS_DT_504.dgn	SHEET 98 OF 248
SCALE	AS NOTED	

PLOT DATE: 7/19/2017 9:33:03 PM
JKIELLMA

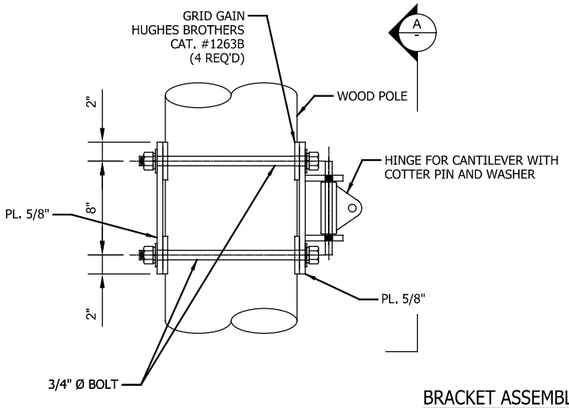

BRACKET ASSEMBLY

507-2

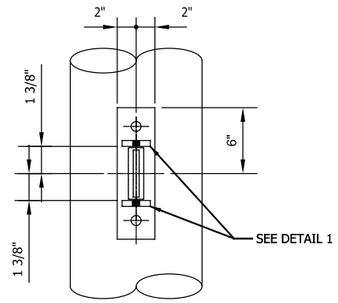

SECTION A

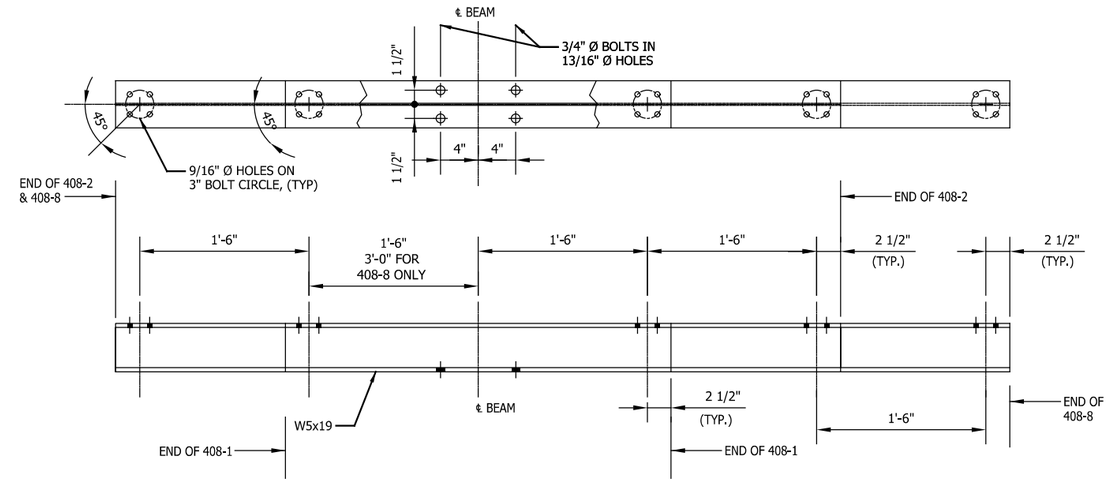

ASSEMBLY

507-3

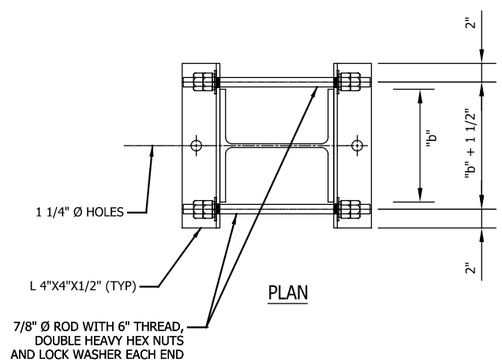

PLAN

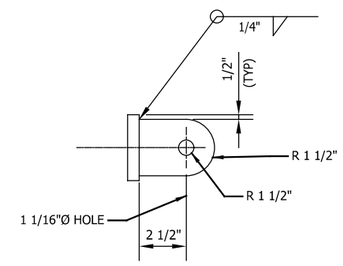

DETAIL 1

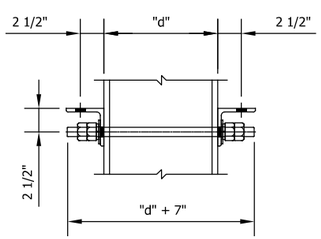

COLUMN SLIDING CONNECTION

507-4

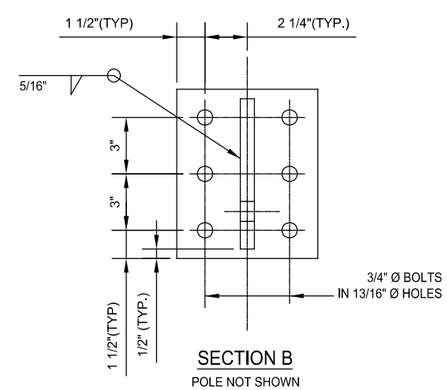

SECTION B

POLE NOT SHOWN

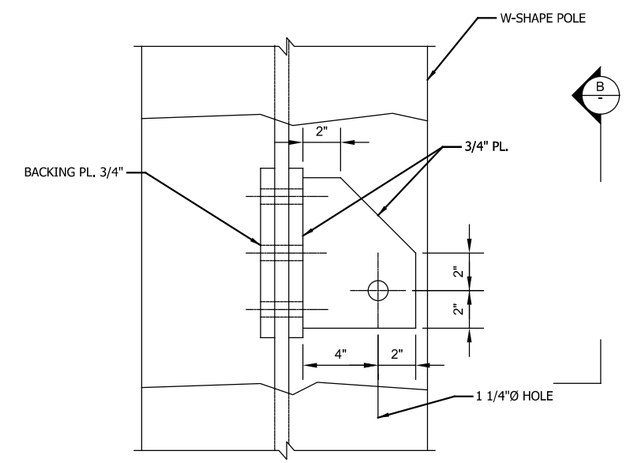

DOWN GUY ATTACHMENT

507-5

NOT FOR CONSTRUCTION

SERIES SYSDT-47 OF SYSDT-53

JKIELLMA

PLOT DATE: 7/19/2017 9:33:13 PM

HDR Engineering, Inc.
8550 W Bryn Mawr Ave., Suite 900
Chicago, IL 60631

www.hdrinc.com

Burns

BURNS ENGINEERING, INC. | 215 979-7700
TWO COMMERCE SQUARE, 2001 MARKET ST, SUITE 600
PHILADELPHIA, PA 19103

ISSUE	DATE	DESCRIPTION

NICTD

NORTHERN INDIANA COMMUTER
TRANSPORTATION DISTRICT
33 East Highway 12
Chesterton, Indiana 46304

WEST LAKE CORRIDOR

DYER TO HAMMOND, INDIANA

DESIGNED:	RSW
DRAWN:	VJC
CHECKED:	MP
DATE:	07/21/17

NICTD - WEST LAKE CORRIDOR - MP WL 61.38 TO WL 69.18
SINGLE TRACK

BRACKETS 507 SYSTEM

FILENAME	SHT_WL_OCS_DT_507.dgn	SHEET 99 OF 248
SCALE	AS NOTED	

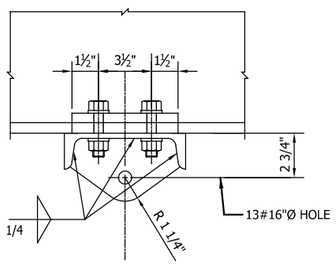

SECTION A

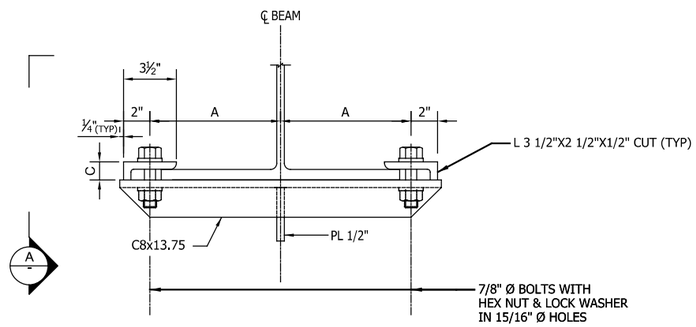

SLIDING CONNECTION ASSEMBLY

508-2

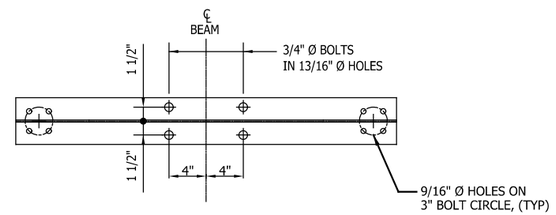

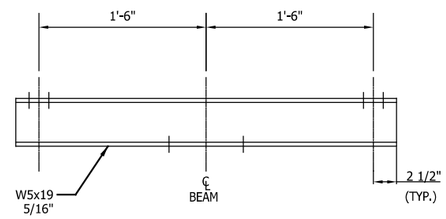

ASSEMBLY

508-3

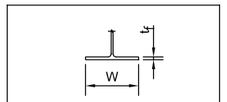

MARK	DIMENSIONS	
	A	C
508-2	W/2 + 5/16"	t_f + 7/16"

NOT FOR CONSTRUCTION

SERIES SYSDT-48 OF SYSDT-53

HDR Engineering, Inc.
8550 W Bryn Mawr Ave., Suite 900
Chicago, IL 60631
www.hdrinc.com

Burns
BURNS ENGINEERING, INC. | 215 979-7700
TWO COMMERCE SQUARE, 2001 MARKET ST, SUITE 600
PHILADELPHIA, PA 19103

ISSUE	DATE	DESCRIPTION

NICTD
NORTHERN INDIANA COMMUTER
TRANSPORTATION DISTRICT
33 East Highway 12
Chesterton, Indiana 46304

WEST LAKE CORRIDOR
DYER TO HAMMOND, INDIANA

DESIGNED:	RSW
DRAWN:	VJC
CHECKED:	MP
DATE:	07/21/17

NICTD - WEST LAKE CORRIDOR - MP WL 61.38 TO WL 69.18
SINGLE TRACK

STEEL SLIDING CLAMP 508 SYSTEM

FILENAME	SHT_WL_OCS_DT_508.dgn
SCALE	AS NOTED

SHEET 100 OF 248

PLOT DATE: 7/19/2017 9:33:21 PM JKIELLMA

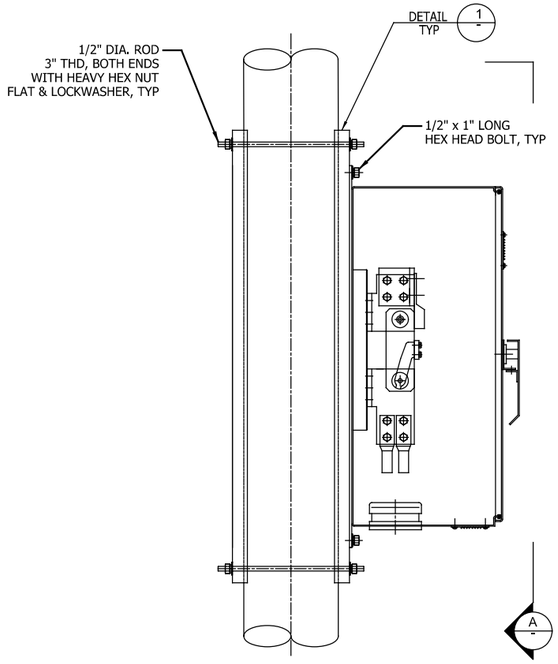

DISCONNECT SWITCH MOUNTING ASSEMBLY
509-1

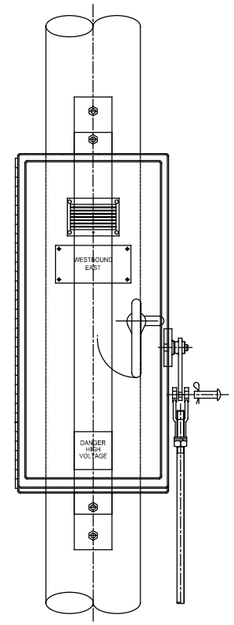

SECTION A

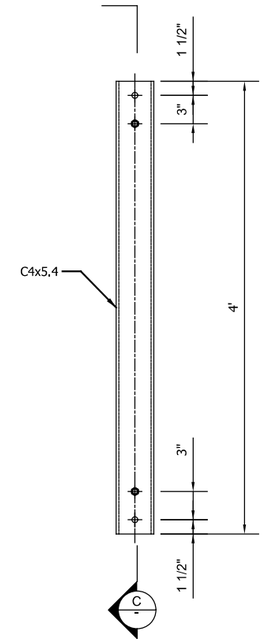

DETAIL 1

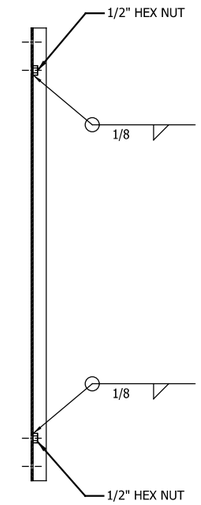

SECTION C

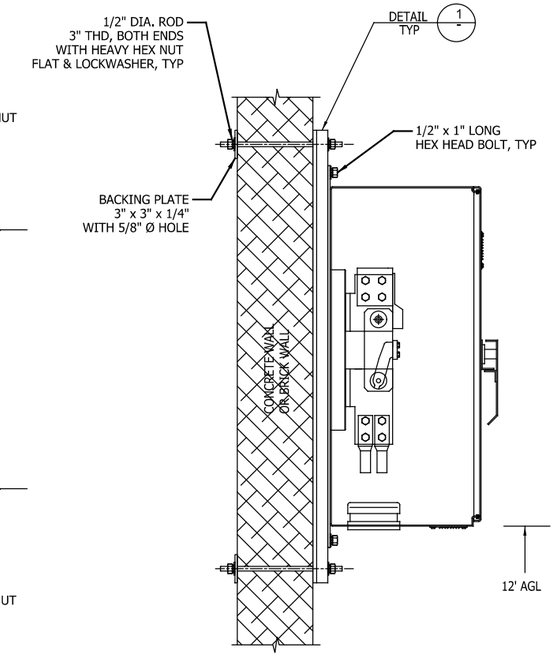

DISCONNECT SWITCH WALL MOUNTING BRACKET
509-3

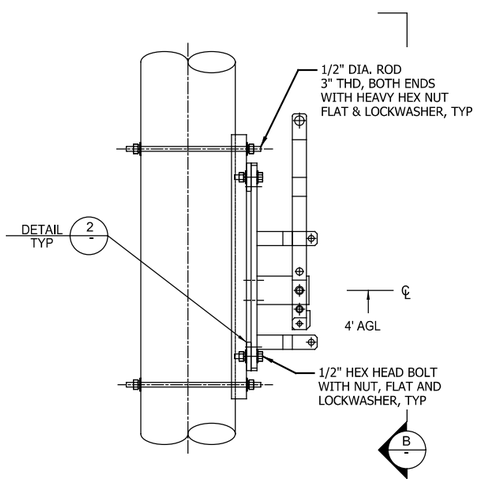

DISCONNECT SWITCH HANDLE MOUNTING ASSEMBLY
509-2

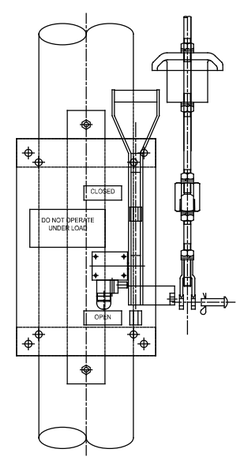

SECTION B

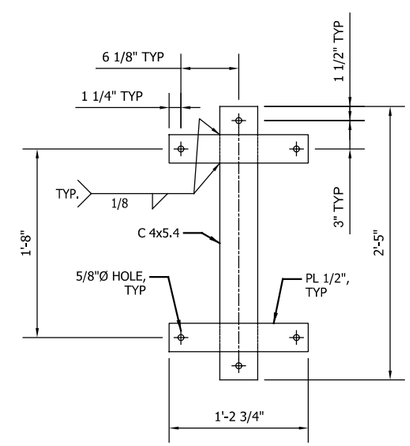

DETAIL 2

DISCONNECT SWITCH HANDLE MOUNTING BRACKET

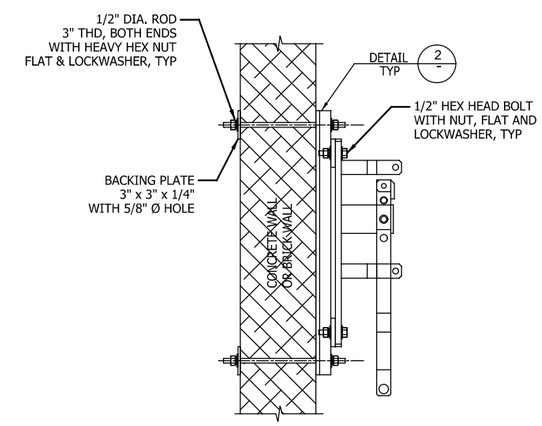

DISCONNECT SWITCH HANDLE WALL MOUNTING BRACKET
509-4

NOT FOR CONSTRUCTION

SERIES SYSDT-49 OF SYSDT-53

JKIELLMA

PLOT DATE: 7/19/2017 9:33:49 PM

HDR Engineering, Inc.
8550 W Bryn Mawr Ave., Suite 900
Chicago, IL 60631
www.hdrinc.com

Burns
BURNS ENGINEERING, INC. | 215 979-7700
TWO COMMERCE SQUARE, 2001 MARKET ST, SUITE 600
PHILADELPHIA, PA 19103

ISSUE	DATE	DESCRIPTION

NICTD
NORTHERN INDIANA COMMUTER TRANSPORTATION DISTRICT
33 East Highway 12
Chesterton, Indiana 46304

WEST LAKE CORRIDOR
DYER TO HAMMOND, INDIANA

DESIGNED:	RSW
DRAWN:	VJC
CHECKED:	MP
DATE:	07/21/17

NICTD - WEST LAKE CORRIDOR - MP WL 61.38 TO WL 69.18
SINGLE TRACK

DISCONNECT SWITCH 509 SYSTEM

FILENAME	SHT_WL_OCS_DT_509.dgn	SHEET 101 OF 248
SCALE	AS NOTED	

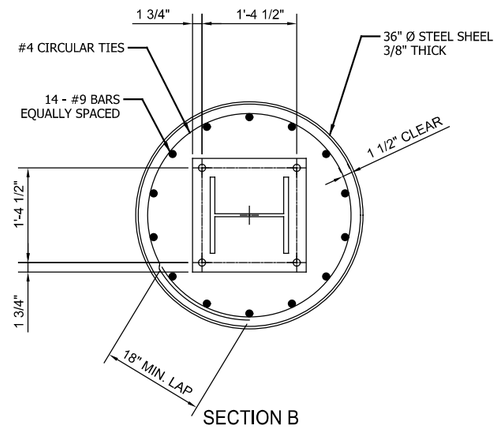

SECTION B

SCALE 1"=1'-0"

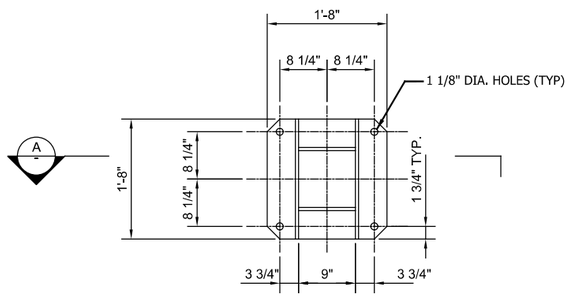

ANCHOR ANGLES DETAIL

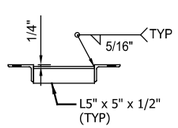

SECTION A

SCALE 1"=1'-0"

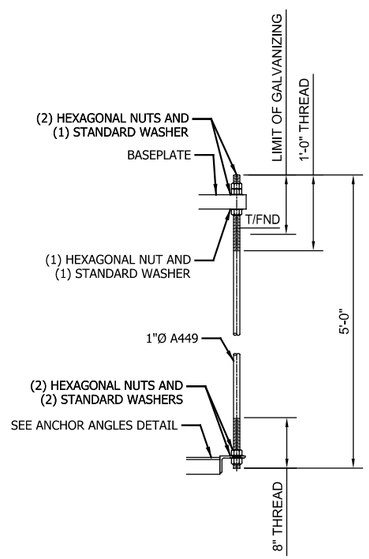

ANCHOR BOLT DETAIL

SCALE 1"=1'-0"

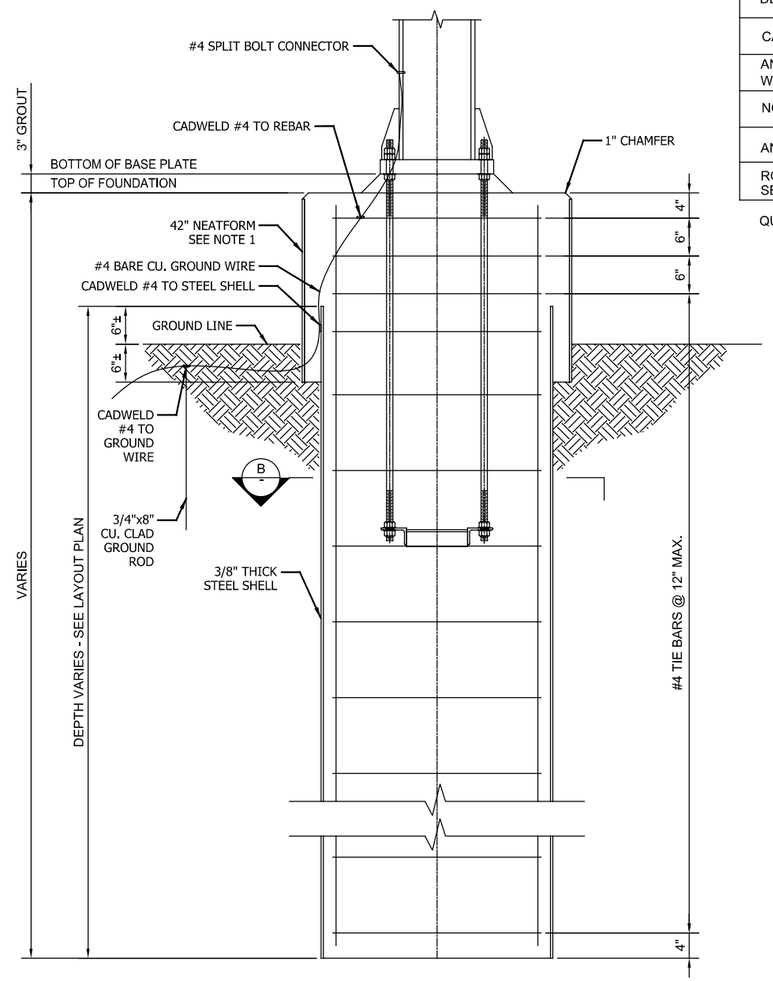

FOUNDATION

521-XX

WHERE XX IS FOUNDATION DEPTH IN FT.

BILL OF MATERIAL		
DESCRIPTION	UNIT	QTY
CLASS "A" CONCRETE	CY	4.71
DEFORMED STEEL BARS #4	LB	135
DEFORMED STEEL BARS #9	LB	850
CAISSON 3/8" THK. X 3'-0" DIA.	FT	15
ANCHOR BOLT 1" DIA. - A449 W/ 5 HEX NUTS & 4 STD WASHERS	EA	4
NON-SHRINK GROUT	CY	0.028
ANCHOR ANGLES ASSEMBLY	EA	1
ROUND NEAT FORM 42"I.D.X 2'-6" SEE NOTE 1	EA	1

QUANTITIES FOR D = 15'-0" FOUNDATION

NOTES:

1. REDUCE NEATFORM DIAMETER TO 36" IN RETAINING WALL SECTIONS.
2. TOP OF FOUNDATION EQUAL TO TOP OF RAIL AT ALL LOCATIONS.

NOT FOR CONSTRUCTION

SERIES SYSDT-50 OF SYSDT-53

JKIELLMA

7/19/2017 9:34:00 PM

PLOT DATE:

HDR Engineering, Inc.
8550 W Bryn Mawr Ave., Suite 900
Chicago, IL 60631

www.hdrinc.com

Burns
BURNS ENGINEERING, INC. | 215 979-7700
TWO COMMERCE SQUARE, 2001 MARKET ST, SUITE 600
PHILADELPHIA, PA 19103

ISSUE	DATE	DESCRIPTION

NICTD
NORTHERN INDIANA COMMUTER TRANSPORTATION DISTRICT
33 East Highway 12
Chesterton, Indiana 46304

WEST LAKE CORRIDOR
DYER TO HAMMOND, INDIANA

DESIGNED: RSW
DRAWN: JLD
CHECKED: MP
DATE: 07/21/17

NICTD - WEST LAKE CORRIDOR - MP WL 61.38 TO WL 69.18
SINGLE TRACK

FOUNDATION BWA 521 SYSTEM

FILENAME SHT_WL_OCS_DT_521.dgn

SCALE AS NOTED

SHEET 102 OF 248

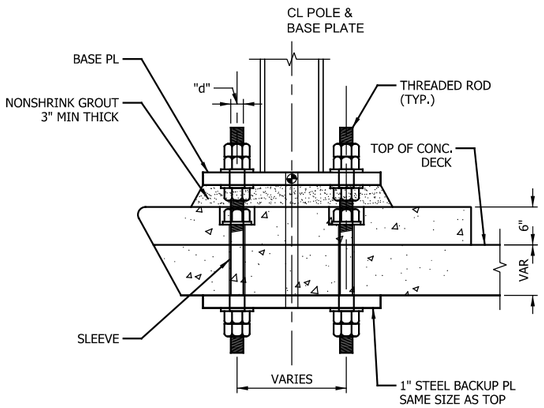

SIDE POLE ON DECK

SCALE NTS

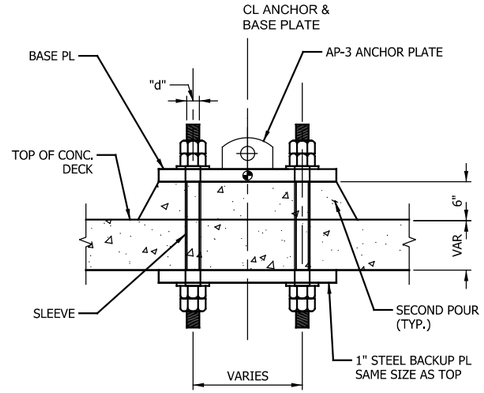

DOWN GUY ANCHOR ON DECK

SCALE NTS

FOUNDATION TYPES						
FOUNDATION TYPES	REF. POLE TYPE OR DOWN GUY ANCHOR	DIMENSIONS			ANCHOR BOLT DIAMETER "d"	REMARKS
		A	BC	D		
522-1	501-1 (W10x39)	18"	18"	2"	(4) - 1 3/4" Ø	
522-2	501-2 (W10x49)	20"	20"	2 1/4"	(4) - 2" Ø	
522-3	501-3 (W12x53)	20"	20"	TBD	(4) - TBD Ø	
522-4	501-4 (W12x72)	24"	24"	TBD	(4) - TBD Ø	
522-5	DOWN GUY ANCHOR	20"	20"	TBD	(4) - TBD Ø	

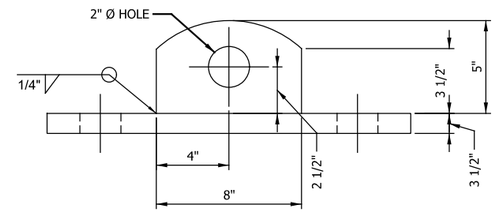

DOWNGUY ANCHOR PLATE AP-3

SCALE NTS

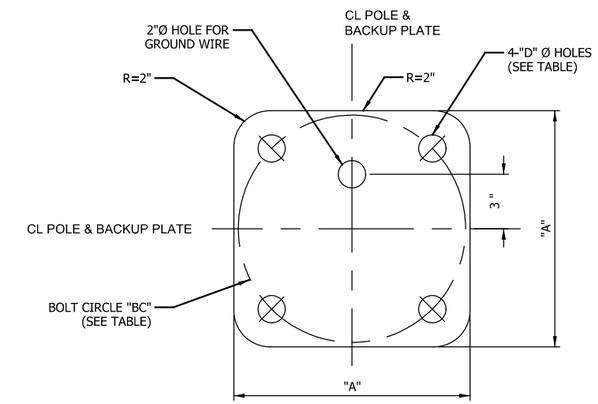

BACKUP PLATE - TYPE 1

SCALE NTS

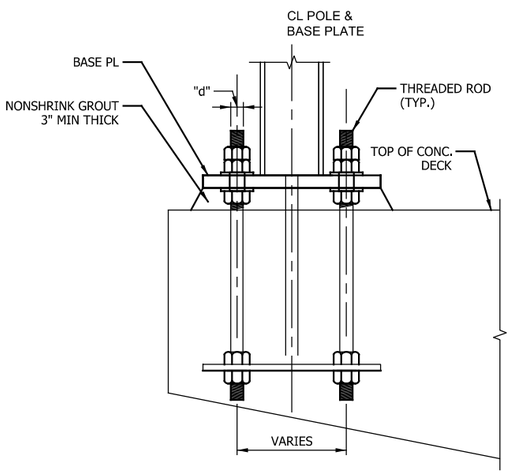

SIDE POLE ON PIER

SCALE NTS

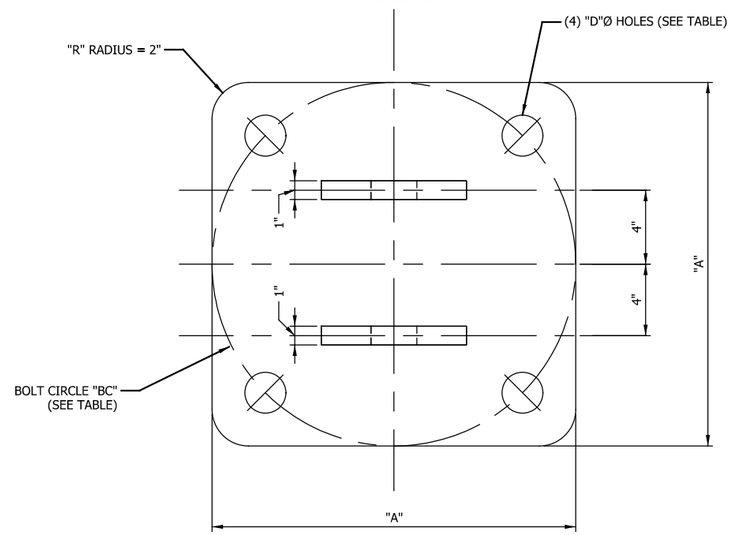

DOWNGUY ANCHOR PLATE AP-3 - PLAN

SCALE NTS

NOTES:

1. ALL ANCHOR BOLTS (THREADED RODS) SHALL HAVE 6 HEX NUTS AND 4 PLAIN WASHERS FOR POLES.
2. ALL ANCHOR BOLTS (THREADED RODS) SHALL HAVE 4 HEX NUTS AND 2 PLAIN WASHERS FOR DOWNGUY ANCHORAGE.
3. SUPPLY BACKUP PLATES AND BEVEL WASHERS AS REQUIRED.
4. ALL STEEL PLATES AND HARDWARE SHALL BE HOT DIP GALVANIZED.

NOT FOR CONSTRUCTION

SERIES SYSDT-51 OF SYSDT-53

JKIELLMA

PLOT DATE: 7/19/2017 9:34:09 PM

HDR Engineering, Inc.
8550 W Bryn Mawr Ave., Suite 900
Chicago, IL 60631
www.hdrinc.com

Burns
BURNS ENGINEERING, INC. | 215 979-7700
TWO COMMERCE SQUARE, 2001 MARKET ST, SUITE 600
PHILADELPHIA, PA 19103

ISSUE	DATE	DESCRIPTION

NICTD
NORTHERN INDIANA COMMUTER TRANSPORTATION DISTRICT
33 East Highway 12
Chesterton, Indiana 46304

WEST LAKE CORRIDOR
DYER TO HAMMOND, INDIANA

DESIGNED:	RSW
DRAWN:	VJC
CHECKED:	MP
DATE:	07/21/17

NICTD - WEST LAKE CORRIDOR - MP WL 61.38 TO WL 69.18
SINGLE TRACK

FOUNDATION AERIAL 522 SYSTEM

FILENAME	SHT_WL_OCS_DT_522.dgn
SCALE	AS NOTED

SHEET 103 OF 248

OCS FOUNDATIONS			
FOUNDATION		ANCHOR BOLTS	
TYPE	FND DIA.	"BC"	"d"
523-1-XX	3' - 0"	18"	1 3/4"
523-2-XX	3' - 0"	20"	2"
523-3-XX	3' - 0"	22"	TBD
523-4-XX	3' - 0"	24"	TBD
523-DGA-XX	3' - 0"	TBD	TBD

BILL OF MATERIAL		
DESCRIPTION	UNIT	QTY
CLASS "A" CONCRETE	CY	3.77
DEFORMED STEEL BARS #4	LB	108.37
DEFORMED STEEL BARS #9	LB	680.7
CAISSON 3/8" THK. X 3'-0" DIA.	FT	12
ANCHOR RODS, "d" DIA, A449 W/ 5 HEX NUTS & 4 STD WASHERS	EA	4
NON-SHRINK GROUT	CY	0.028
ANCHOR ANGLES ASSEMBLY	EA	1
ROUND NEAT FORM 42"I.D.X 2'-6"	EA	1

QUANTITIES FOR D = 12'-0" FOUNDATION

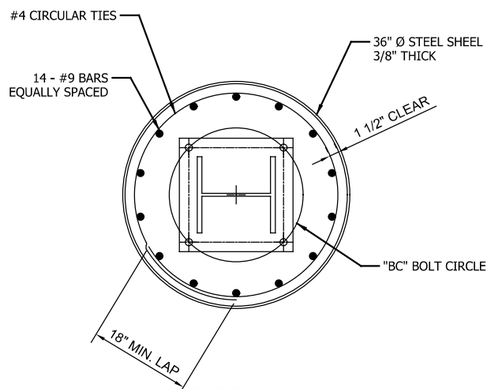

SECTION B
SCALE 1"=1'-0"

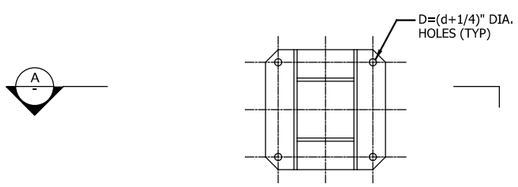

ANCHOR ANGLES DETAIL

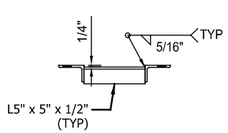

SECTION A
SCALE 1"=1'-0"

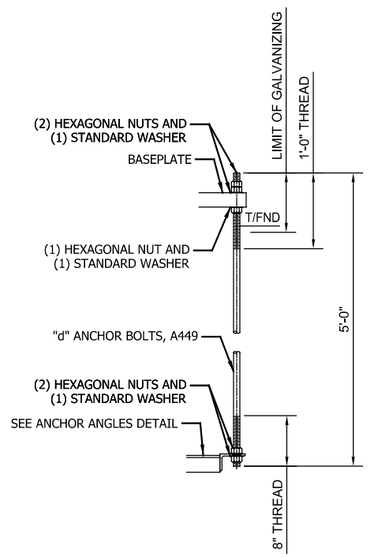

ANCHOR BOLT DETAIL
SCALE 1"=1'-0"

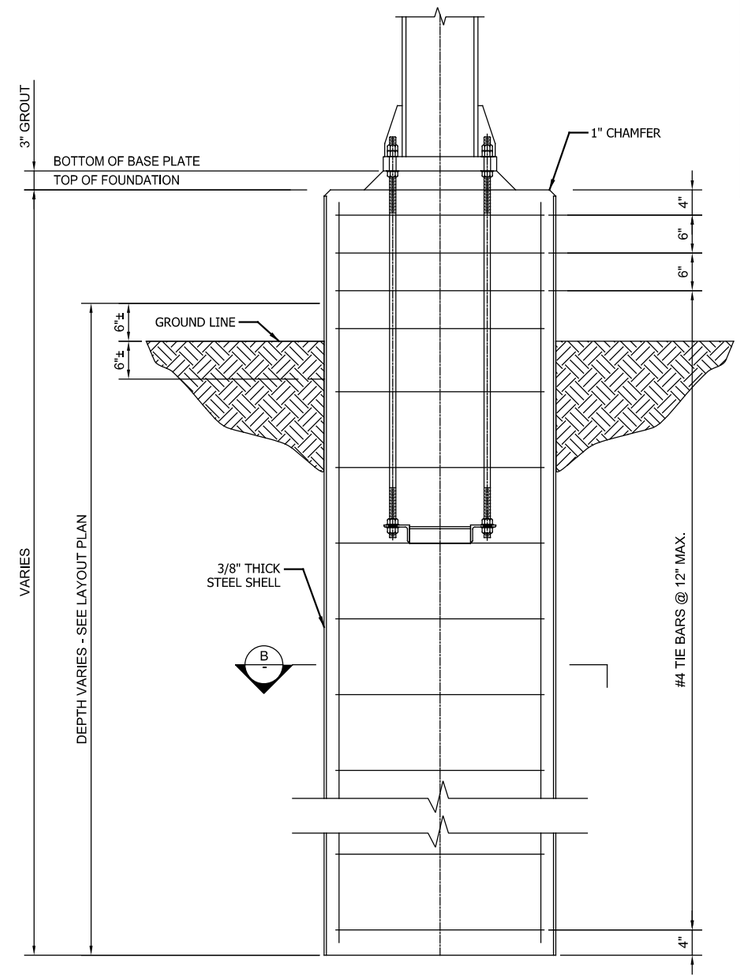

FOUNDATION
523-XX
WHERE XX IS FOUNDATION DEPTH IN FT.

JKIELLMA

PLOT DATE: 7/19/2017 9:34:19 PM

NOT FOR CONSTRUCTION

SERIES SYSDT-52 OF SYSDT-53

HDR Engineering, Inc.
8550 W Bryn Mawr Ave., Suite 900
Chicago, IL 60631
www.hdrinc.com

Burns
BURNS ENGINEERING, INC. | 215 979-7700
TWO COMMERCE SQUARE, 2001 MARKET ST, SUITE 600
PHILADELPHIA, PA 19103

ISSUE	DATE	DESCRIPTION

NICTD
NORTHERN INDIANA COMMUTER TRANSPORTATION DISTRICT
33 East Highway 12
Chesterton, Indiana 46304

WEST LAKE CORRIDOR
DYER TO HAMMOND, INDIANA

DESIGNED:	RSW
DRAWN:	VJC
CHECKED:	MP
DATE:	07/21/17

NICTD - WEST LAKE CORRIDOR - MP WL 61.38 TO WL 69.18
SINGLE TRACK

FOUNDATION RET WALL 523 SYSTEM

FILENAME: SHT_WL_OCS_DT_523.dgn
SCALE: AS NOTED

SHEET 104 OF 248

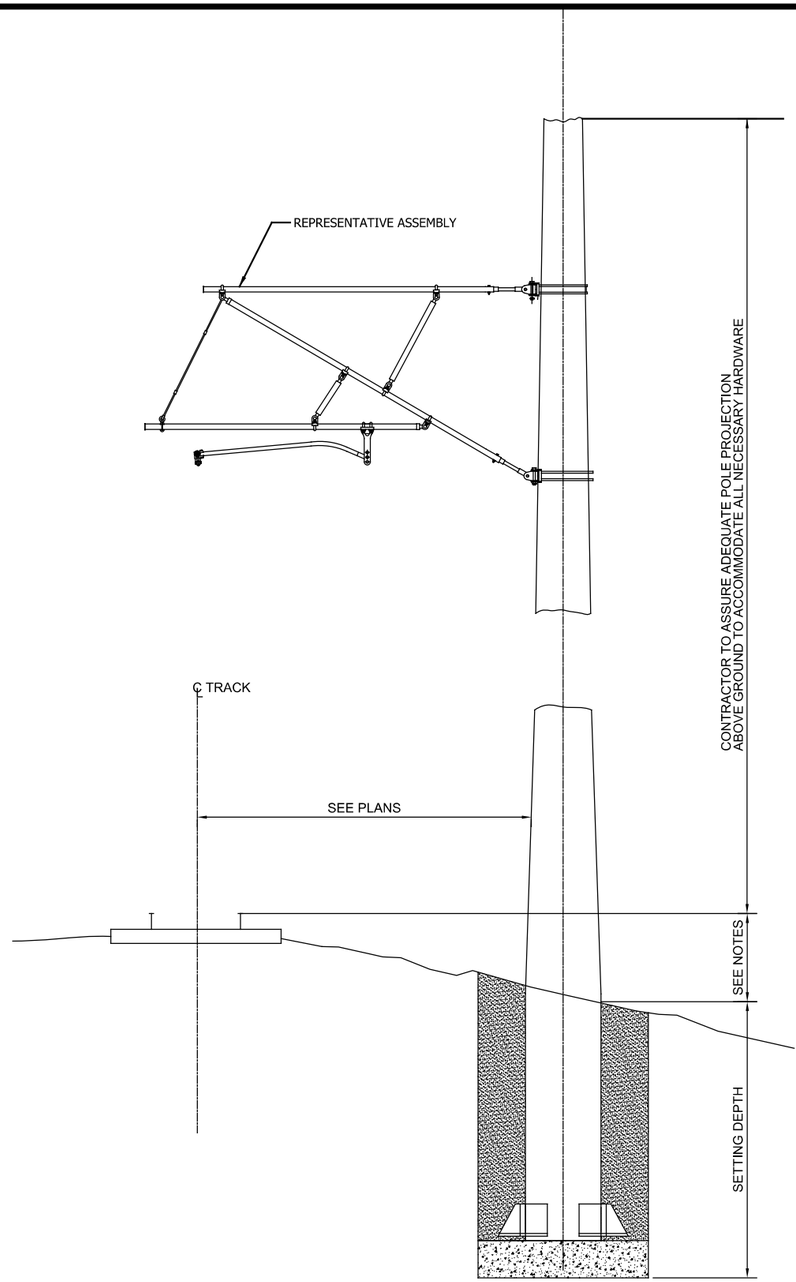

TYPICAL WOOD POLE

525-XX-YY

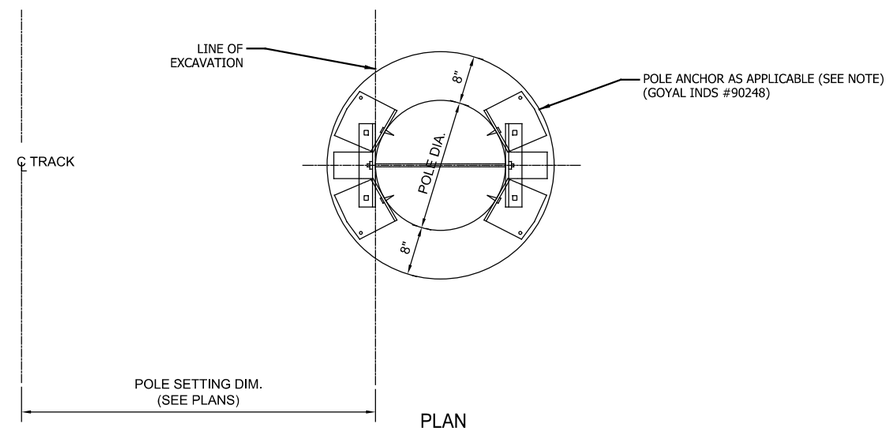

PLAN

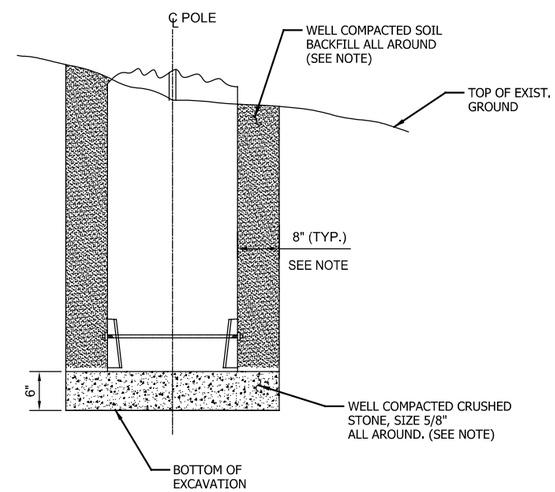

TYPICAL WOOD POLE EXCAVATION

MINIMUM POLE SETTING DEPTHS (FT)			
POLE LENGTH	NORMAL SOIL (SEE NOTE)		SOLID ROCK
	LEVEL GROUND	SIDE HILL	
30'	5.5'	7.0'	5.0'
35'	5.5'	7.5'	5.0'
40'	6.0'	8.0'	6.5'
45'	6.5'	8.5'	6.5'
50'	7.0'	9.0'	6.0'
55'	7.5'	9.5'	6.0'
60'	8.0'	10.0'	6.5'
65'	8.5'	10.5'	7.0'
70'	9.0'	11.0'	7.0'
75'	9.5'	11.5'	7.0'
80'	10.0'	12.0'	7.5'

POLE REF. = 525-XX
WHERE XX IS POLE LENGTH IN FT.

NOTES:

1. POLE REF. = 525-XX-YY
WHERE XX IS POLE LENGTH IN FT. AND YY IS SETTING DEPTH.

2. ON SLOPING GROUND, HOLE DEPTH IS RELATED TO LOW SIDE OF HOLE. ADJUST VALUES AS REQUIRED.

3. HOLE DIAMETER TO BE SUFFICIENT TO ALLOW TAMPING TO FULL DEPTH OF HOLE WITH POLE IN PLACE.

4. POLE ANCHOR TO BE SET PERPENDICULAR TO APPLICATION OF HORIZONTAL LOAD ON THE POLE AT CANTILEVER LOCATIONS.

5. PRIOR TO TRANSPORTING POLE TO SITE, CONTRACTOR SHALL INSPECT THE SPECIFIC LOCATION AND ADJUST POLE LENGTH TO SUIT THE GROUND PROFILE.

6.POLE ANCHOR IS ONLY USED AT DEADEND AND TERMINATION POLES.

NOT FOR CONSTRUCTION

SERIES SYSDT-53 OF SYSDT-53

PLOT DATE: 7/19/2017 9:34:28 PM JKIELLMA

HDR Engineering, Inc.
8550 W Bryn Mawr Ave., Suite 900
Chicago, IL 60631
www.hdrinc.com

Burns
BURNS ENGINEERING, INC. | 215 979-7700
TWO COMMERCE SQUARE, 2001 MARKET ST, SUITE 600
PHILADELPHIA, PA 19103

ISSUE	DATE	DESCRIPTION

NICTD
NORTHERN INDIANA COMMUTER
TRANSPORTATION DISTRICT
33 East Highway 12
Chesterton, Indiana 46304

WEST LAKE CORRIDOR
DYER TO HAMMOND, INDIANA

DESIGNED:	RSW
DRAWN:	VJC
CHECKED:	MP
DATE:	07/21/17

NICTD - WEST LAKE CORRIDOR - MP WL 61.38 TO WL 69.18
SINGLE TRACK

WOOD POLE 525 SYSTEM

FILENAME	SHT_WL_OCS_DT_525.dgn
SCALE	AS NOTED

SHEET 105 OF 248

GENERAL NOTES:

1. THE PROPOSED SIGNAL SYSTEM FOR THE WEST LAKE CORRIDOR SHALL BE COMPATIBLE AND BE ABLE TO INTERFACE WITH THE EXISTING SOUTH SHORE LINE SIGNAL SYSTEM.

2. THE PROPOSED SIGNAL SYSTEM MUST BE ABLE TO FUNCTION WITHOUT INTERFACE FROM THE 1500 VOLTS DC PROPULSION.

3. THE PROPOSED WEST LAKE CORRIDOR WILL CONNECT TO THE SOUTH SHORE LINE WITHIN EXISTING NORTH STATE LINE CP 69.2 INTERLOCKING VIA A #15 TURNOUT ON TRACK 1.
   A) THE NEW SWITCH WILL BE 7 SWITCH LOCATED JUST EAST OF THE IHBRR DIAMOND.
   B) THE NEW SIGNAL FROM THE WEST LAKE EXTENSION WILL BE 6N.
   C) NEW SIGNALS FOR 2W AND 4W SIGNALS WILL BE LOCATED ON THE RE-ALIGNED SOUTH SHORE LINE.
   D) THERE WILL BE A NEW PRE-WIRED MICROPROCESSOR BASED CIH. THE EXISTING CIH WILL BE USED TO INTERFACE THE NEW CIH WITH THE EXISTING WAYSIDE SIGNAL EQUIPMENT.

4. EXISTING DEARBORN AVE AND BRUNSWICK ST HIGHWAY GRADE CROSSINGS WILL BE RETIRED WHEN THE SOUTH SHORE LINE IS REALIGNED.

5. EXISTING HAMMOND CP 68.5 GAUNTLET TRACKS WILL BE RETIRED WHEN THE SOUTH SHORE LINE IS REALIGNED.
   A) PROPOSED HAMMOND CP 68.8 GAUNTLET TRACKS WILL BE A NEW INTERLOCKING LOCATED ON THE REALIGNED SOUTH SHORE LINE JUST EAST OF EXISTING NORTH STATE LINE CP 69.2.
   B) HAMMOND CP 68.8 SHOULD BE A SEPARATE INTERLOCKING FROM NORTH STATE LINE CP 69.2 DUE TO POSSIBLE TRAIN OPERATION CONFLICT WITH IHBRR AT-GRADE CROSSING.

6. EXISTING SHEFFIELD AVE HIGHWAY GRADE CROSSING WILL BE RETIRED.
   A) PROPOSED SHEFFIELD AVE HIGHWAY GRADE CROSSING WILL BE WITHIN HAMMOND CP 68.8 INTERLOCKING LIMITS ON THE REALIGNED SOUTH SHORE LINE.
   B) NEW CROSSING CONTROL HOUSE, START CASES, WARNING DEVICES AND AFO TRACK CIRCUITS ARE REQUIRED. APPROACH CIRCUITS SHALL BE DESIGNED TO PROVIDE 20 SECONDS MINIMUM WARNING TIME PRIOR TO THE ARRIVAL OF THE TRAIN AT THE CROSSING.

7. HOHMAN AVE HIGHWAY GRADE CROSSING WILL BE ON THE REALIGNED SOUTH SHORE LINE. NEW CROSSING CONTROL HOUSE, START CASES, WARNING DEVICES AND AFO TRACK CIRCUITS ARE REQUIRED. APPROACH CIRCUITS SHALL BE DESIGNED TO PROVIDE 20 SECONDS MINIMUM WARNING TIME PRIOR TO THE ARRIVAL OF THE TRAIN AT THE CROSSING.

8. SHEFFIELD AVE AND HOHMAN AVE HIGHWAY GRADE CROSSINGS ARE NOT QUIET ZONE CROSSINGS.

9. THE CONTROL LINES FOR THE REALIGNED SOUTH SHORE LINE NEED TO BE REVISED DUE TO THE RELOCATION OF THE HAMMOND CP 68.8 GAUNTLET TRACKS.

10. CENTRALIZED TRAFFIC CONTROL WILL BE THE METHOD OF OPERATION ON THE WEST LAKE CORRIDOR. THIS IS THE SAME AS THE SOUTH SHORE LINE.
    A) CTC BEGIN FOR NORTHBOUND IS AT THE NORTH END OF MUNSTER/DYER STATION PLATFORM.
    B) THE TRACK THROUGH MUNSTER/DYER STATION IS YARD LIMITS.
    C) THE TRACK CIRCUIT WITHIN MUNSTER/DYER STATION IS FOR INDICATION ONLY.

11. CONTROL LINES HAVE BEEN DESIGNED FOR THE WEST LAKE CORRIDOR. CONTRACTOR IS REQUIRED TO VALIDATE THE CONTROL LINES.

12. WAYSIDE COLOR LIGHT SIGNALS DISPLAY ASPECTS TO CONVEY ROUTING INFORMATION AND FOR SAFE TRAIN SEPARATION.

13. THERE ARE FIVE END OF SIDING INTERLOCKINGS ON THE WEST LAKE CORRIDOR. ONE ON EACH END OF THE TWO PASSING SIDINGS AND ONE INTO THE MAINTENANCE STORAGE FACILITY YARD.
    A) ALL INTERLOCKINGS WILL HAVE PRE-WIRED CENTRAL INSTRUMENT HOUSES (CIH). THE HOUSES SHALL CONNECT TO THE FIBER OPTIC BACKBONE VIA FIBER OPTIC TRANSMISSIONS SYSTEM (FOTS) HOUSES.
    B) ALL CIHS SHALL HAVE GE ELECTROLOGIX MICROPROCESSOR BASED VITAL AND NON-VITAL LOGIC CONTROLLERS.

14. TRACK CIRCUITS OUTSIDE THE INTERLOCKINGS SHALL BE ELECTRIFIED ELECTROCODE.
    A) THE MAXIMUM LENGTH OF ELECTRIFIED ELECTROCODE TRACK CIRCUIT IS 5000 FEET. THEREFORE, ELECTROCODE REPEATER LOCATIONS ARE REQUIRED.

15. THERE ARE TEN QUIET ZONE HIGHWAY GRADE CROSSINGS ON THE WEST LAKE CORRIDOR.
    A) FISHER ST. WILL HAVE A 100-FOOT MEDIAN ON BOTH SIDES OF THE TRACKS.
    B) THE OTHER CROSSINGS WILL HAVE FOUR QUADRANT ENTRANCE/EXIT GATES AND A VEHICLE DETECTION LOOP SYSTEM.
    C) APPROACH CIRCUITS SHALL BE DESIGNED TO PROVIDE 20 SECONDS MINIMUM WARNING TIME PRIOR TO THE ARRIVAL OF THE TRAIN AT THE CROSSING.
    D) AUDIO FREQUENCY OVERLAY (AFO) TRACK CIRCUITS ARE USED FOR TRAIN DETECTION AND ACTUATION OF THE HIGHWAY GRADE CROSSINGS. CONTRACTOR SHALL DESIGN AN AFO ASSIGNMENT PLAN TO GIVE 20 SECONDS MINIMUM WARNING TIME PRIOR TO THE ARRIVAL OF TRAIN AT THE CROSSINGS. 790 HZ PHASE SHIFT OVERLAY IS NOT COMPATIBLE WITH 156 HZ ELECTROCODE (5TH ORDER HARMONIC).
    E) ALL CROSSINGS WILL HAVE CROSS BUCKS, TRACK SIGNS, GATES, FLASHERS, ELECTRONIC BELLS AND HIGHWAY PAVEMENT MARKINGS REQUIRED FOR A COMPLETE CROSSING INSTALLATION.
    F) ALL CROSSINGS LOCATIONS SHALL HAVE NEW PRE-WIRED INSTRUMENT HOUSES.
    G) THE MAIN GATE SHALL EXTEND TO 90% OF THE FURTHEST LANE BUT SHALL NOT EXCEED 34 FEET.
    H) CARE SHOULD BE EXERCISED TO MAKE CERTAIN THAT GATE ARMS WILL ALWAYS BE SAFELY CLEAR OF OVERHEAD OBSTRUCTIONS. GATE MECHANISMS SHALL BE LOCATED SUCH THAT A FAILED GATE WILL NOT CONTACT AERIAL ELECTRICAL WIRES AND CABLES.
    I) GATE MECHANISM SHALL BE GROUNDED.
    J) PEDESTRIAN GATES ARE REQUIRED AT CROSSINGS WITH SIDEWALKS. THE PEDESTRIAN GATE SHALL HAVE A SEPARATE MECHANISM FROM THE MAIN GATE.

16. THERE WILL BE PEDESTRIAN CROSSINGS AT THE PROPOSED HAMMOND-GATEWAY PASSENGER STATIONS. WARNING SYSTEMS SHALL INCLUDE ALL SIGNS, PEDESTRIAN GATES, FLASHERS, AND PAVEMENT MARKINGS. THE ELECTRONIC BELLS SHALL BE SOFT TONE. THE FUNCTION OF THESE SYSTEMS IS TO PERMIT SAFE AND EFFICIENT OPERATION OF PASSENGER SERVICE WHILE PROVIDING PROTECTION FOR PEDESTRIANS.

17. RIDGE AVE CROSSING PRE-EMPTS THE TRAFFIC SIGNALS AT MANOR AVE.

18. 173RD ST CROSSING IS LOCATED WITHIN CP 65.3 INTERLOCKING LIMITS.
    A) SWITCH POSITION IS USED TO DETERMINE WHETHER OCCUPIED NORTHBOUND APPROACH ON MAIN OR SIDING TRACK WILL ACTIVATE CROSSING WARNING DEVICES.
    B) TRAIN ON CROSSING APPROACH CIRCUIT SHALL NOT ACTIVATE WARNING DEVICES UNTIL INTERLOCKING SIGNAL IS REQUESTED. PERMISSIVE ASPECT ON INTERLOCKING SIGNAL SHALL NOT BE DISPLAYED UNTIL CROSSING GATE REPEATER IS SET.
    C) WHEN TRAIN MEET OCCURS CROSSING DIRECTIONAL STICK CIRCUITS MUST BE RELEASED BEFORE OPPOSING TRAIN MOVEMENT ACTIVATES CROSSING WARNING DEVICES.

19. NIPSCO POWER WILL BE INSTALLED AT ALL CONTROL POINTS, INTERMEDIATE SIGNAL LOCATIONS, ELECTROCODE REPEATER LOCATIONS, HIGHWAY GRADE CROSSINGS AND CROSSING START LOCATIONS.
    A) THE CONTROL POINTS WILL HAVE A NATURAL GAS GENERATOR FED BY A NIPSCO GAS LINE FOR STANDBY POWER.
    B) ALL LOCATIONS WILL HAVE BATTERY CHARGERS AND BATTERIES. THE BATTERIES SHALL BE SIZED TO PROVIDE A MINIMUM OF EIGHT HOURS OF STANDBY SERVICE AT MAXIMUM LOAD AFTER A POWER FAILURE.

20. FIBER OPTIC CABLE INSTALLATION IN TRACK AREA:
    A) 144 STRAND FIBER OPTIC CABLES WILL BE INSTALLED ON BOTH SIDES OF THE TRACKS IN 1 1/4 INCH DUCT. ONE CABLE WILL HAVE CONNECTIONS TO PASSENGER STATIONS, FOTS HOUSES, INTERMEDIATE SIGNAL LOCATIONS, HIGHWAY GRADE CROSSING HOUSES AND THE MAINTENANCE STORAGE FACILITY. THE SECOND CABLE WILL BE AN EXPRESS FOR THE ENTIRE LENGTH OF THE CORRIDOR.
    B) BOTH CABLES WILL BE BURIED FOUR FEET BELOW THE BOTTOM OF THE TIE IN THE BALLASTED TRACK AREA.
    C) MARKING TAPE WILL BE INSTALLED ABOVE ALL BURIED CABLES.
    D) FIBER OPTIC CABLES ON THE GUIDEWAY WILL BE INSTALLED ON BOTH SIDES OF THE TRACKS IN 1 1/4 INCH DUCT. THE INSTALLATION METHOD IS TO BE DETERMINED.
    E) FIBER OPTIC CABLES ARE TO BE INSTALLED AWAY FROM CATENARY POLES.
    F) HAND HOLE JUNCTION BOXES ARE TO BE INSTALLED EVERY 2000 FEET.
    G) BOTH CABLES MAY BE INSTALLED AERIALLY WHERE INSTALLATION IN DUCT IS NOT PRACTICABLE.
    H) BOTH CABLES WILL BE TERMINATED IN THE CP 69.2 FOTS HOUSE.
    I) 144 STRAND FO CABLE WILL BE TERMINATED IN THE HAMMOND/GATEWAY STATION, SOUTH HAMMOND STATION, MUNSTER/RIDGE STATION, MUNSTER/DYER STATION, THE MAINTENANCE STORAGE FACILITY, AND ALL FIVE FOTS HOUSES.
    J) 2 STRAND FO CABLE WILL BE TERMINATED IN EACH OF THE HIGHWAY GRADE CROSSINGS.
    K) 4 STRAND FO CABLE WILL BE TERMINATED IN EACH OF THE INTERMEDIATE SIGNAL LOCATIONS.

NOT FOR CONSTRUCTION

SERIES CSGGN-1 OF CSGGN-3

HDR Engineering, Inc.
8550 W Bryn Mawr Ave., Suite 900
Chicago, IL 60631
www.hdrinc.com

Burns
BURNS ENGINEERING, INC. | 215 979-7700
TWO COMMERCE SQUARE, 2001 MARKET ST, SUITE 600
PHILADELPHIA, PA 19103

ISSUE	DATE	DESCRIPTION

NICTD
NORTHERN INDIANA COMMUTER TRANSPORTATION DISTRICT
33 East Highway 12
Chesterton, Indiana 46304

WEST LAKE CORRIDOR
DYER TO HAMMOND, INDIANA

DESIGNED:	KT
DRAWN:	KT
CHECKED:	MJP
DATE:	07/21/17

NICTD - WEST LAKE CORRIDOR - MP WL 61.38 TO WL 69.18
SINGLE TRACK

NOTES
SYSTEM

FILENAME	SHT_WL_CSIG_GN_600	SHEET 106 OF 248
SCALE	AS NOTED	

PLOT DATE: 7/19/2017 9:34:37 PM
JKCIELLMA

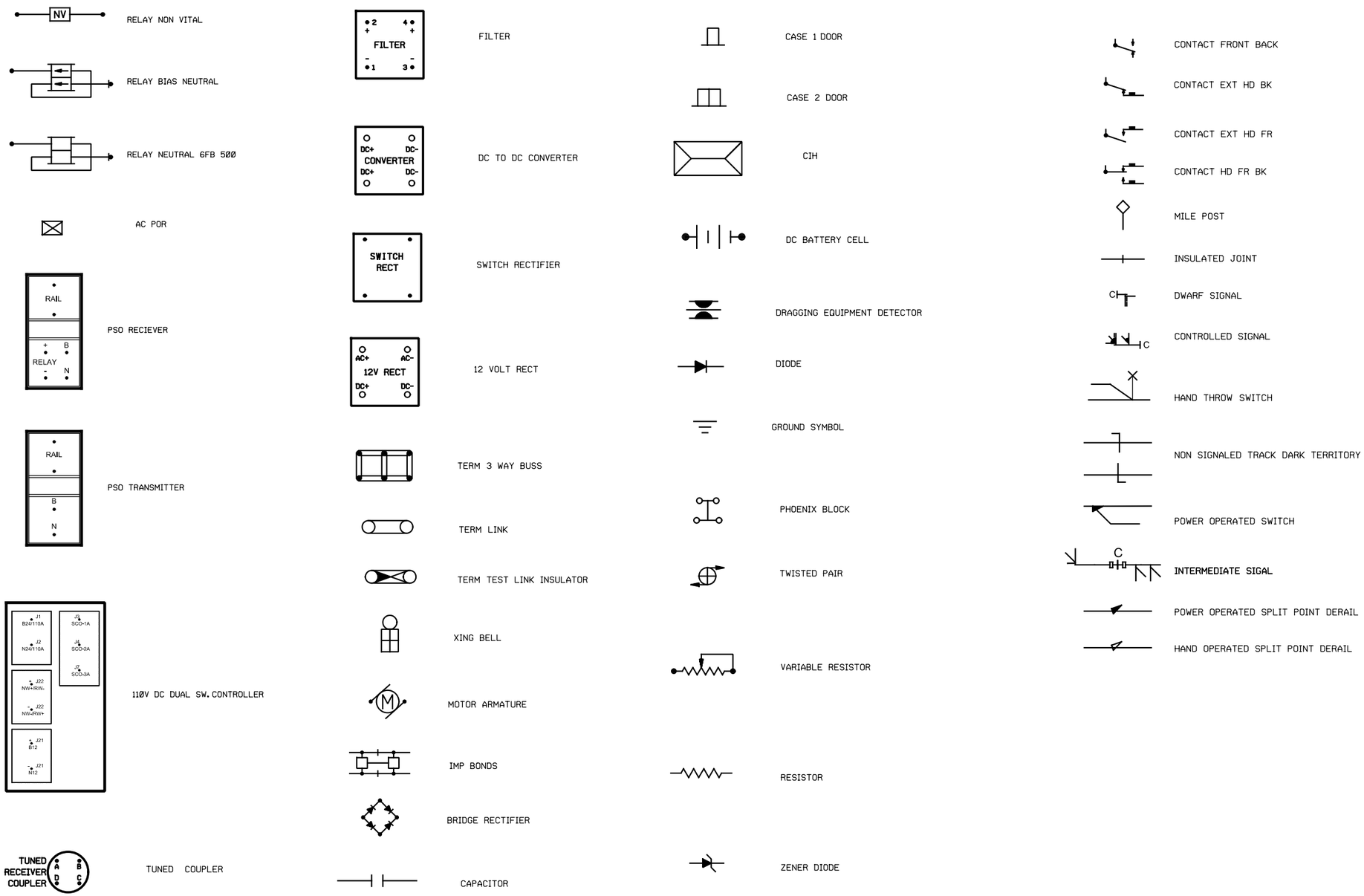

NOT FOR CONSTRUCTION

SERIES CSGGN-2 OF CSGGN-3

JKIELLMA

PLOT DATE: 7/19/2017 9:34:47 PM

HDR Engineering, Inc.
8550 W Bryn Mawr Ave., Suite 900
Chicago, IL 60631

www.hdrinc.com

Burns
BURNS ENGINEERING, INC. | 215 979-7700
TWO COMMERCE SQUARE, 2001 MARKET ST, SUITE 600
PHILADELPHIA, PA 19103

ISSUE	DATE	DESCRIPTION

NICTD
NORTHERN INDIANA COMMUTER TRANSPORTATION DISTRICT
33 East Highway 12
Chesterton, Indiana 46304

WEST LAKE CORRIDOR
DYER TO HAMMOND, INDIANA

DESIGNED:	KT
DRAWN:	KT
CHECKED:	MJP
DATE:	07/21/17

NICTD - WEST LAKE CORRIDOR - MP WL 61.38 TO WL 69.18
SINGLE TRACK

TYPICAL CIRCUIT PLAN SYMBOLS SYSTEM

FILENAME	SHT_WL_CSIG_GN_601	SHEET 107 OF 248
SCALE	AS NOTED	

SYMBOLS FOR WAYSIDE SIGNALS	
GENERAL	THE ASPECTS DISPLAYED BY A SIGNAL, METHOD OF CONTROL, TYPE OF SIGNAL, ETC. ARE SHOWN BY SUITABLE COMBINATION OF SYMBOLS.
ASPECTS	GREEN · YELLOW · RED · LUNAR WHITE · FLASHING
TYPE OF CONTROL	CONTROLLED · AUTOMATIC
NOTES	1. PERMISSIVE SIGNALS SHALL BE SHOWN BY MEANS OF A NUMBER PLATE, NUMBER PLATE IS DEPICTED AS A RECTANGLE. 2. ASPECT NORMALLY DISPLAYED: DENOTED WITH A HEAVY LINE.

HIGHWAY CROSSING SIGNALS

ONE WAY BOTH WAYS
FLASHING LIGHTS

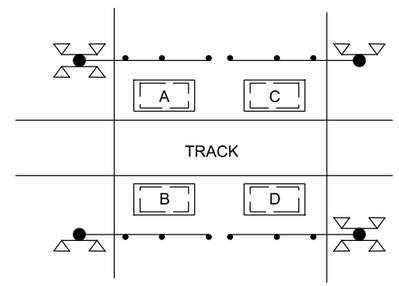

LOOP DETECTORS
W/ EXIT GATES

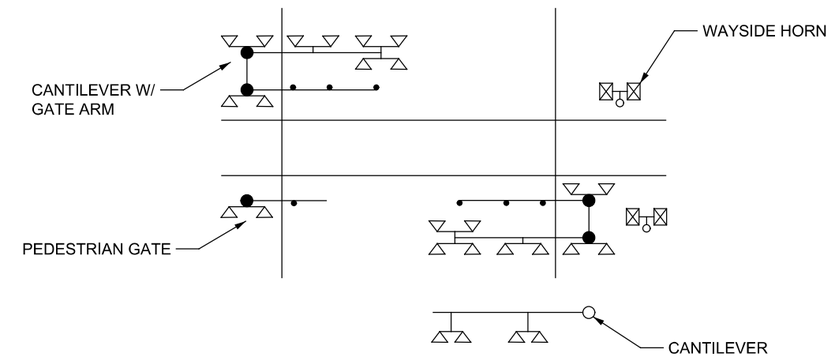

AUTOMATIC CROSSING GATES
WITH FLASHING LIGHT SIGNALS
AND BELLS

GROUND MAST

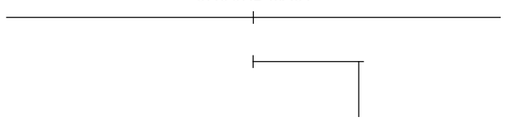

BRACKET POST

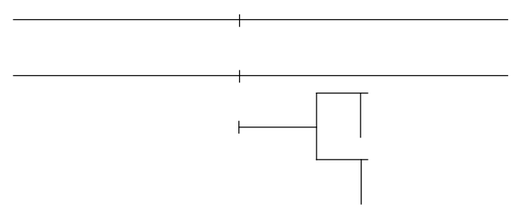

SIGNAL BRIDGE

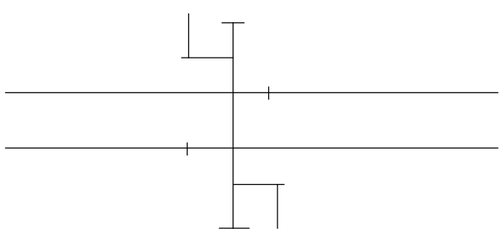

GROUND MAST

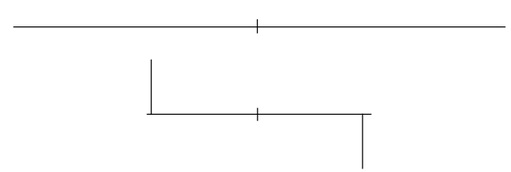

NOT FOR CONSTRUCTION

SERIES CSGGN-3 OF CSGGN-3

JKIELLMA

PLOT DATE: 7/19/2017 9:34:56 PM

HDR Engineering, Inc.
8550 W Bryn Mawr Ave., Suite 900
Chicago, IL 60631
www.hdrinc.com

Burns
BURNS ENGINEERING, INC. | 215 979-7700
TWO COMMERCE SQUARE, 2001 MARKET ST, SUITE 600
PHILADELPHIA, PA 19103

ISSUE	DATE	DESCRIPTION

NICTD
NORTHERN INDIANA COMMUTER TRANSPORTATION DISTRICT
33 East Highway 12
Chesterton, Indiana 46304

WEST LAKE CORRIDOR
DYER TO HAMMOND, INDIANA

DESIGNED:	KT
DRAWN:	KT
CHECKED:	MJP
DATE:	07/21/17

NICTD - WEST LAKE CORRIDOR - MP WL 61.38 TO WL 69.18
SINGLE TRACK

TYPICAL WAYSIDE SIGNAL & CROSSING SYMBOLS SYSTEM

FILENAME	SHT_WL_CSIG_GN_602
SCALE	AS NOTED

SHEET 108 OF 248

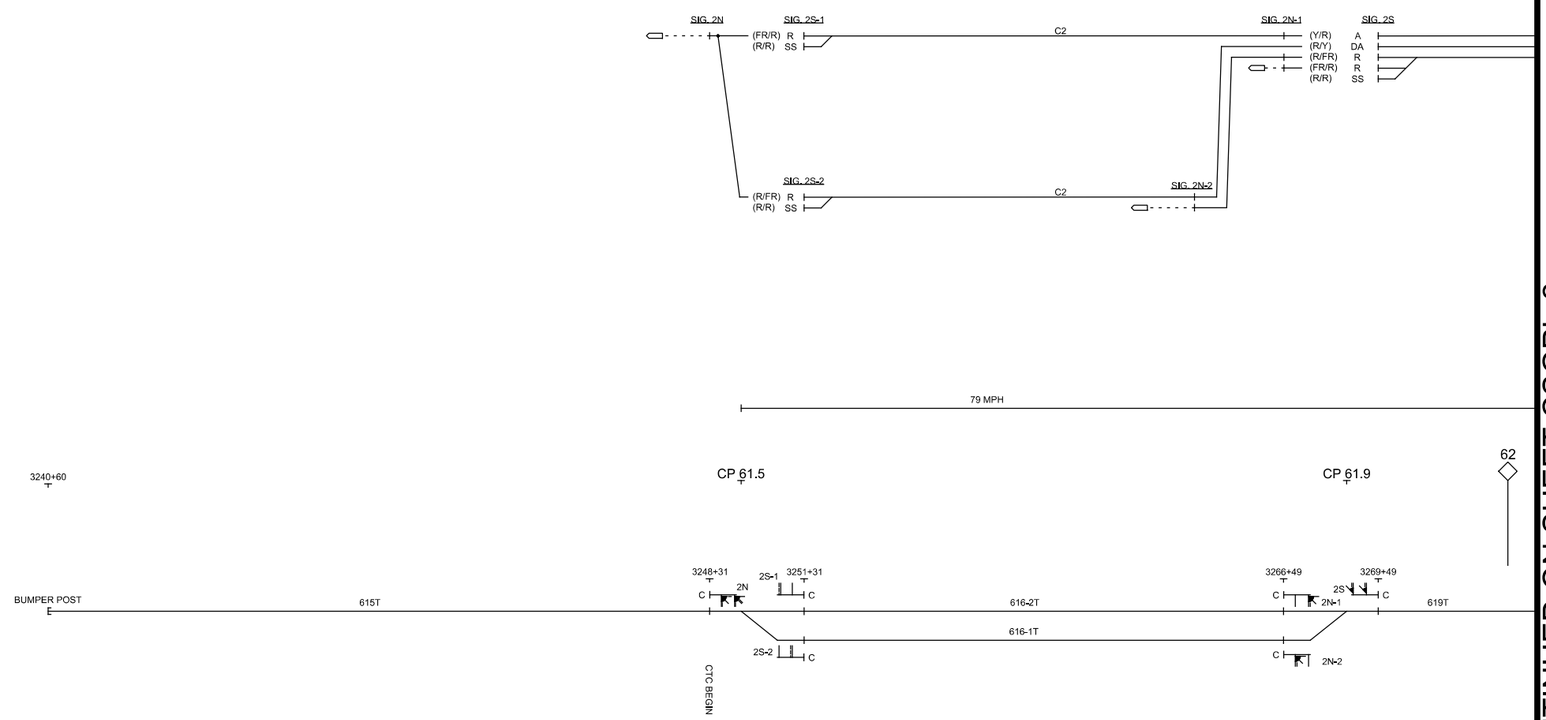

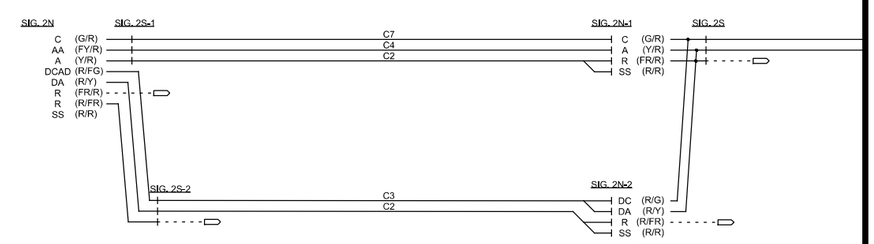

CONTINUED ON SHEET CSGPL-2

NOT FOR CONSTRUCTION

SERIES CSGPL-1 OF CSGPL-35

JKOELLMA

PLOT DATE: 7/19/2017 9:35:04 PM

HDR Engineering, Inc.
8550 W Bryn Mawr Ave., Suite 900
Chicago, IL 60631
www.hdrinc.com

Burns
BURNS ENGINEERING, INC. | 215 979-7700
TWO COMMERCE SQUARE, 2001 MARKET ST, SUITE 600
PHILADELPHIA, PA 19103

ISSUE	DATE	DESCRIPTION

NICTD
NORTHERN INDIANA COMMUTER TRANSPORTATION DISTRICT
33 East Highway 12
Chesterton, Indiana 46304

WEST LAKE CORRIDOR
DYER TO HAMMOND, INDIANA

DESIGNED: KT
DRAWN: KT
CHECKED: MJP
DATE: 07/21/17

NICTD - WEST LAKE CORRIDOR - MP WL 61.38 TO WL 69.18
SINGLE TRACK

FROM CP 61.5 TO CP 61.9 SYSTEM

FILENAME: SHT_WL_CSIG_PLN_700
SCALE: AS NOTED

SHEET 109 OF 248

CONTINUED ON SHEET CSGPL-1

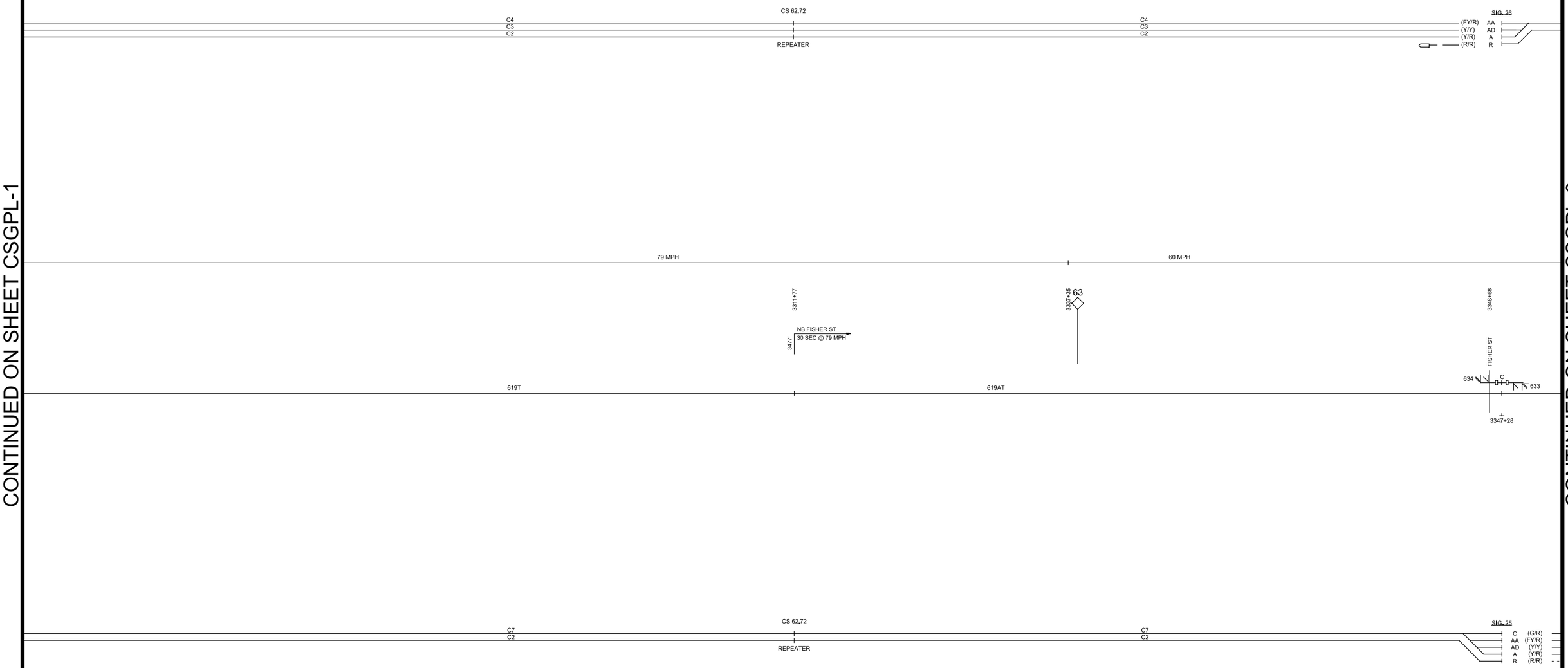

CONTINUED ON SHEET CSGPL-3

NOT FOR CONSTRUCTION

SERIES CSGPL-2 OF CSGPL-35

JKIELLMA

PLOT DATE: 7/19/2017 9:35:13 PM

HDR Engineering, Inc.
8550 W Bryn Mawr Ave., Suite 900
Chicago, IL 60631
www.hdrinc.com

Burns
BURNS ENGINEERING, INC. | 215 979-7700
TWO COMMERCE SQUARE, 2001 MARKET ST, SUITE 600
PHILADELPHIA, PA 19103

ISSUE	DATE	DESCRIPTION

NICTD
NORTHERN INDIANA COMMUTER TRANSPORTATION DISTRICT
33 East Highway 12
Chesterton, Indiana 46304

WEST LAKE CORRIDOR
DYER TO HAMMOND, INDIANA

DESIGNED:	KT
DRAWN:	KT
CHECKED:	MJP
DATE:	07/21/17

NICTD - WEST LAKE CORRIDOR - MP WL 61.38 TO WL 69.18
SINGLE TRACK

CONTROL LINES FROM CS 62.7 TO SIGS 633/634 SYSTEM

FILENAME	SHT_WL_CSIG_PLN_701
SCALE	AS NOTED

SHEET 110 OF 248

CONTINUED ON SHEET CSGPL-2

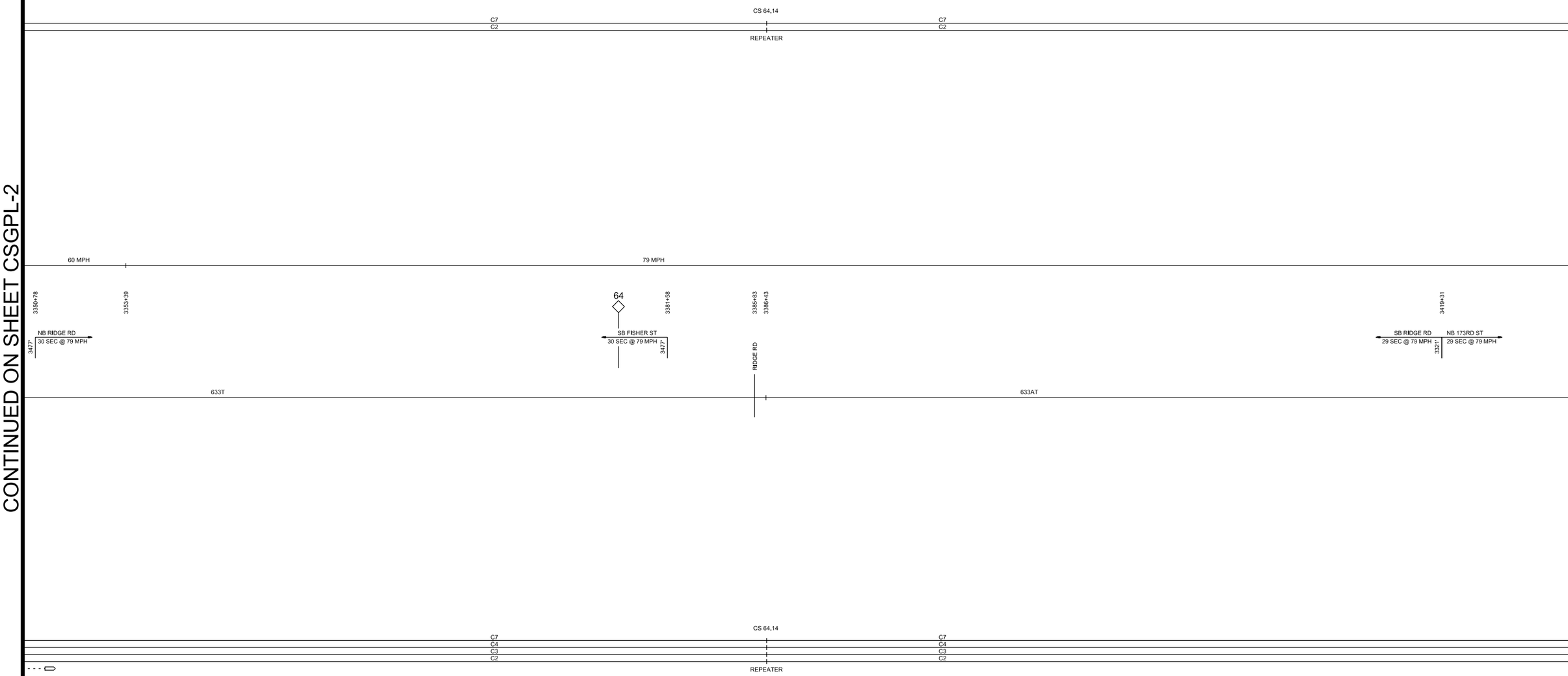

CONTINUED ON SHEET CSGPL-4

NOT FOR CONSTRUCTION

SERIES CSGPL-3 OF CSGPL-35

JKIELLMA

PLOT DATE: 7/19/2017 9:35:21 PM

HDR Engineering, Inc.
8550 W Bryn Mawr Ave., Suite 900
Chicago, IL 60631
www.hdrinc.com

Burns
BURNS ENGINEERING, INC. | 215 979-7700
TWO COMMERCE SQUARE, 2001 MARKET ST, SUITE 600
PHILADELPHIA, PA 19103

ISSUE	DATE	DESCRIPTION

NICTD
NORTHERN INDIANA COMMUTER TRANSPORTATION DISTRICT
33 East Highway 12
Chesterton, Indiana 46304

WEST LAKE CORRIDOR
DYER TO HAMMOND, INDIANA

DESIGNED:	KT
DRAWN:	KT
CHECKED:	MJP
DATE:	07/21/17

NICTD - WEST LAKE CORRIDOR - MP WL 61.38 TO WL 69.18
SINGLE TRACK

FROM CS 64.1 SYSTEM

FILENAME	SHT_WL_CSIG_PLN_702
SCALE	AS NOTED

SHEET 111 OF 248

CONTINUED ON SHEET CSGPL-3

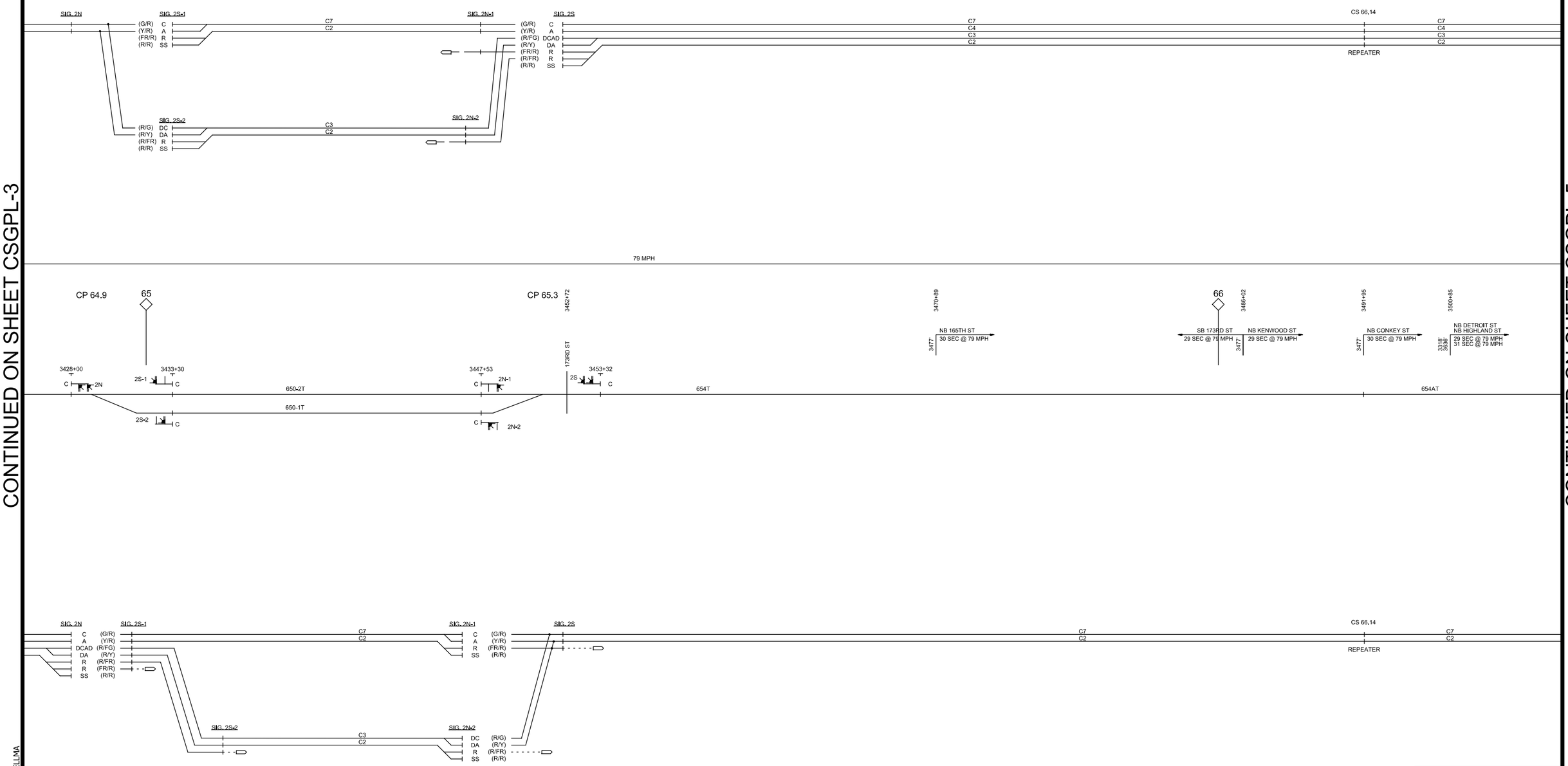

CONTINUED ON SHEET CSGPL-5

NOT FOR CONSTRUCTION

SERIES CSGPL-4 OF CSGPL-35

JKOELLMA

PLOT DATE: 7/20/2017 2:29:53 PM

HDR Engineering, Inc.
8550 W Bryn Mawr Ave., Suite 900
Chicago, IL 60631
www.hdrinc.com

Burns
BURNS ENGINEERING, INC. | 215 979-7700
TWO COMMERCE SQUARE, 2001 MARKET ST, SUITE 600
PHILADELPHIA, PA 19103

ISSUE	DATE	DESCRIPTION

NICTD
NORTHERN INDIANA COMMUTER TRANSPORTATION DISTRICT
33 East Highway 12
Chesterton, Indiana 46304

WEST LAKE CORRIDOR
DYER TO HAMMOND, INDIANA

DESIGNED:	KT
DRAWN:	KT
CHECKED:	MJP
DATE:	07/21/17

NICTD - WEST LAKE CORRIDOR - MP WL 61.38 TO WL 69.18
SINGLE TRACK

FROM CP 64.9 TO CS 66.1 SYSTEM

FILENAME	SHT_WL_CSIG_PLN_703
SCALE	AS NOTED

SHEET 112 OF 248

CONTINUED ON SHEET CSGPL-4

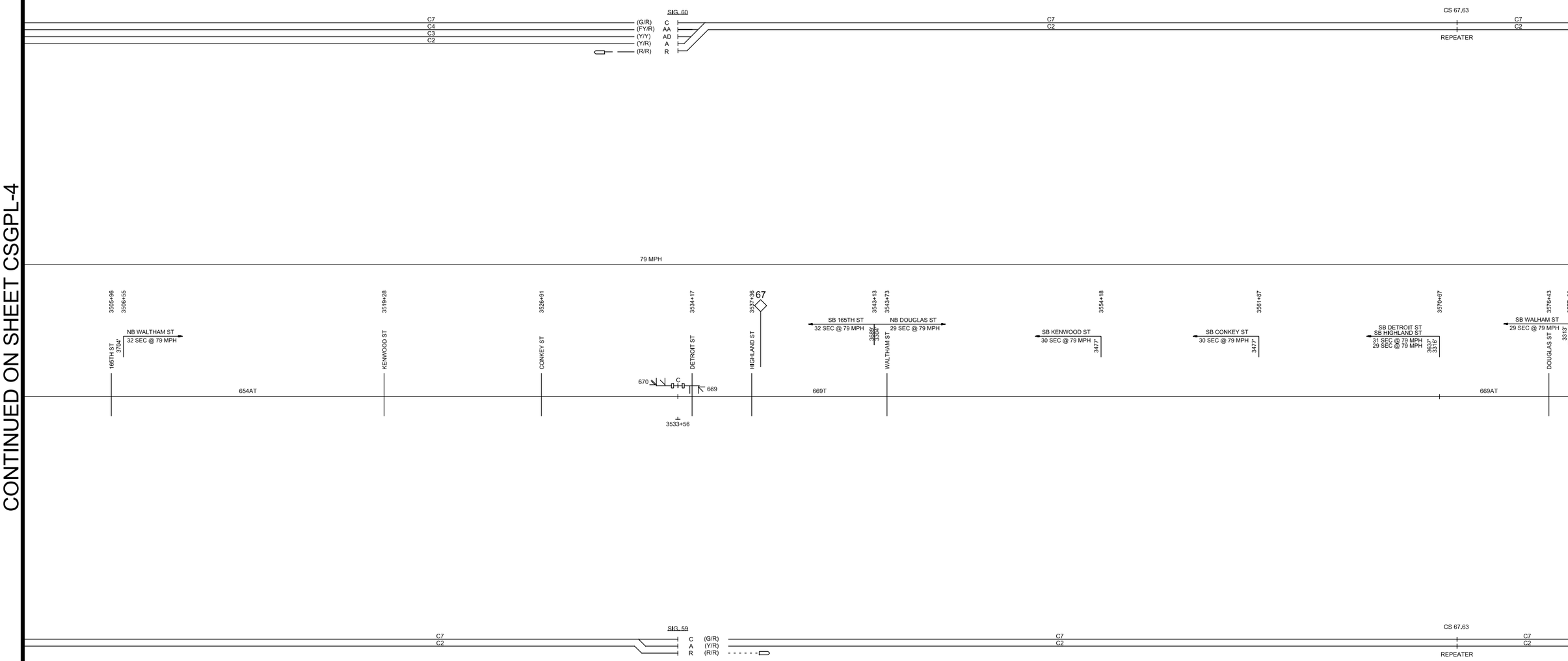

CONTINUED ON SHEET CSGPL-6

JKIELLMA

PLOT DATE: 7/19/2017 9:35:37 PM

NOT FOR CONSTRUCTION

SERIES CSGPL-5 OF CSGPL-35

HDR Engineering, Inc.
8550 W Bryn Mawr Ave., Suite 900
Chicago, IL 60631
www.hdrinc.com

Burns
BURNS ENGINEERING, INC. | 215 979-7700
TWO COMMERCE SQUARE, 2001 MARKET ST, SUITE 600
PHILADELPHIA, PA 19103

ISSUE	DATE	DESCRIPTION

NICTD
NORTHERN INDIANA COMMUTER TRANSPORTATION DISTRICT
33 East Highway 12
Chesterton, Indiana 46304

WEST LAKE CORRIDOR
DYER TO HAMMOND, INDIANA

DESIGNED:	KT
DRAWN:	KT
CHECKED:	MJP
DATE:	07/21/17

NICTD - WEST LAKE CORRIDOR - MP WL 61.38 TO WL 69.18
SINGLE TRACK

CONTROL LINES FROM SIGS 669/670 TO CP 67.7 SYSTEM

FILENAME	SHT_WL_CSIG_PLN_704
SCALE	AS NOTED

SHEET **113 OF 248**

CONTINUED ON SHEET CSGPL-5

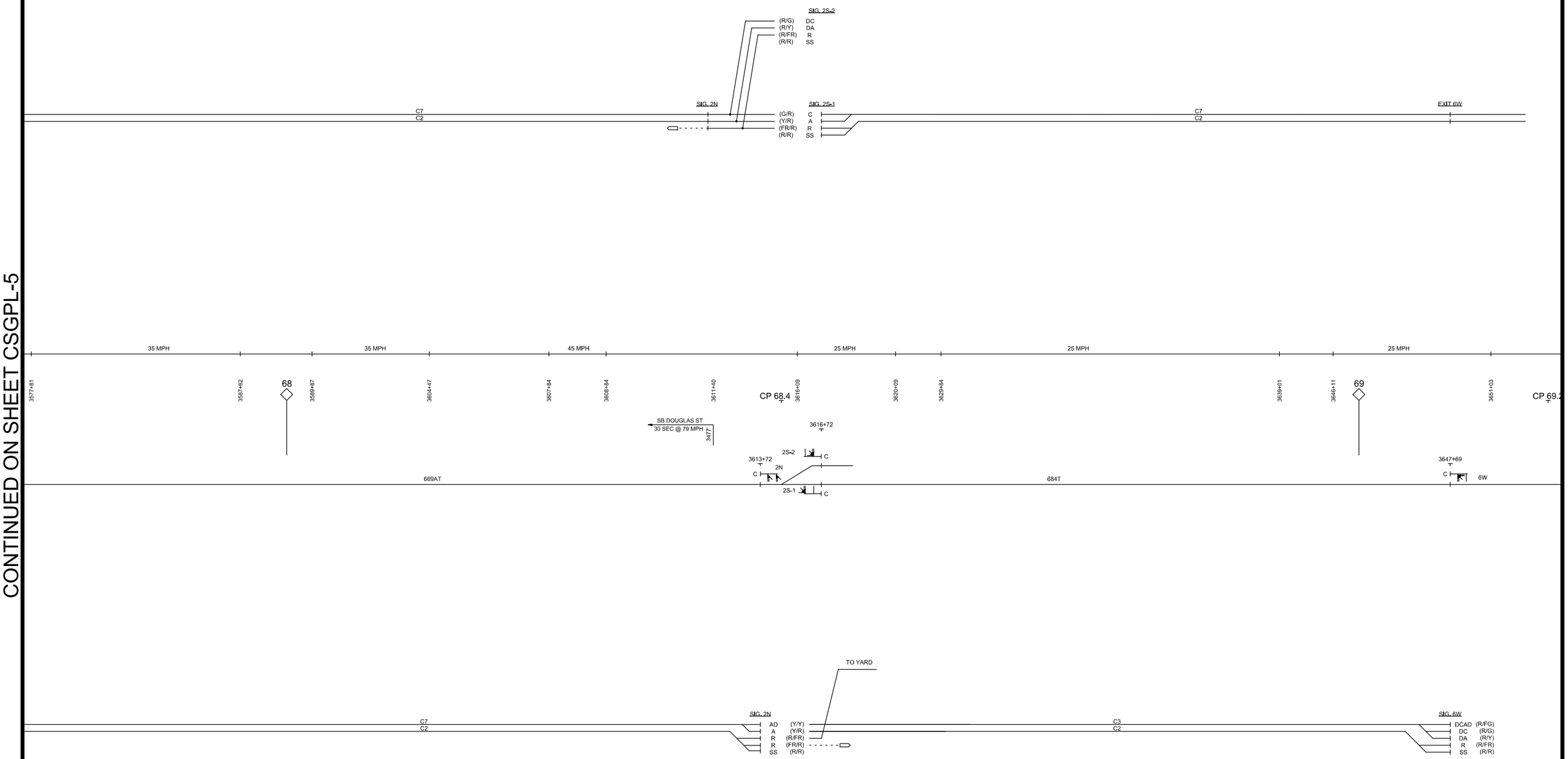

NOT FOR CONSTRUCTION

SERIES CSGPL-6 OF CSGPL-35

JKIELLMA

PLOT DATE: 7/19/2017 9:35:45 PM

HDR Engineering, Inc.
8550 W Bryn Mawr Ave., Suite 900
Chicago, IL 60631
www.hdrinc.com

Burns
BURNS ENGINEERING, INC. | 215 979-7700
TWO COMMERCE SQUARE, 2001 MARKET ST, SUITE 600
PHILADELPHIA, PA 19103

ISSUE	DATE	DESCRIPTION

NICTD
NORTHERN INDIANA COMMUTER TRANSPORTATION DISTRICT
33 East Highway 12
Chesterton, Indiana 46304

WEST LAKE CORRIDOR
DYER TO HAMMOND, INDIANA

DESIGNED:	KT
DRAWN:	KT
CHECKED:	MJP
DATE:	07/21/17

NICTD - WEST LAKE CORRIDOR - MP WL 61.38 TO WL 69.18
SINGLE TRACK

FROM CP 68.4 TO CP 69.2 SYSTEM

FILENAME	SHT_WL_CSIG_PLN_705
SCALE	AS NOTED

SHEET 114 OF 248

Direction	North		
		to	North State Line
Block Definition	CP 68.4		CP 69.2
	Chaining	to	
Chaining Station	3613+72	to	3647+69
Aspects	AD	to	DCAD/DC/DA
	A	to	R/SS
	R/SS		

Data Entry

Sheet	1	
Direction	North	
From		
From	CP 68.4	
To	North State Line	
To	CP 69.2	
Pass Speed	50	
	Chaining	Elevation
Block Start	361372	597.4
Block End	364769	594.36

Formulas

Block Length	3397
Avr Grade (Full Block)	-0.089490727
Pass Equ Dist (full)	3300
Pass G Formula (Full)	using CE205[ed]=dis(4-g)/4
Pass Braking (full)	2675
Pass Reduce to 40	1275
Pass Reduce to 15	2300

SEC 4 - PASSENGER STOP FULL BLOCK

	Speed	50 mph	project design speed
	Distance	3397'	delta chaining stations
	Avr Grade	-0.09%	from delta elevation on GPS dwgs
Good	Equiv Dis	3300'	using CE205[ed]=dis(4-g)/4
625'	Braking Dis	2675'	using CE205 =0.8333(vi^2) + 11.73(vi)

SEC 7 - PASSENGER REDUCE			50 mph		3300'	using CE205 =0.75(vi^2-vf^2) + 11.73(vi)
Good	2025'	Reduce to	40 mph	in	1275'	for diverging move over #20/15 switch
Good	1000'	Reduce to	15 mph	in	2300'	for diverging move over #10/8 switches

NOTES:
track design speed between CP 68.4 and North State Line CP 69.2= 50 MPH
speed restriction from 3616+09 to 3620+09= 25 MPH
speed restriction from 3629+84 to 3639+01= 25 MPH
speed restriction from 3646+11 to 3651+03= 25 MPH

NOTES:

1. CONTRACTOR SHALL VERIFY BLOCK VALIDATION.

JKIELLIMA

PLOT DATE: 7/19/2017 9:35:55 PM

NOT FOR CONSTRUCTION

SERIES CSGPL-7 OF CSGPL-35

HDR Engineering, Inc.
8550 W Bryn Mawr Ave., Suite 900
Chicago, IL 60631
www.hdrinc.com

Burns
BURNS ENGINEERING, INC. | 215 979-7700
TWO COMMERCE SQUARE, 2001 MARKET ST, SUITE 600
PHILADELPHIA, PA 19103

ISSUE	DATE	DESCRIPTION

NICTD
NORTHERN INDIANA COMMUTER TRANSPORTATION DISTRICT
33 East Highway 12
Chesterton, Indiana 46304

WEST LAKE CORRIDOR
DYER TO HAMMOND, INDIANA

DESIGNED:	KT
DRAWN:	KT
CHECKED:	MJP
DATE:	07/21/17

NICTD - WEST LAKE CORRIDOR - MP WL 61.38 TO WL 69.18
SINGLE TRACK

BLOCK VALIDATION NORTH INT CP 68.4 TO CP 69.2 SYSTEM

FILENAME	SHT_WL_CSIG_PLN_712	SHEET 115 OF 248
SCALE	AS NOTED	

Direction	north		
	Intermediate	to	
Block Definition	669		CP 68.4
	Chaining	to	
Chaining Station	3533+56	to	3613+72
Aspects	C	to	AD/A
	A	to	R/SS
	R		

SEC 4 - PASSENGER STOP FULL BLOCK

	Speed	79 mph	project design speed
	Distance	8016'	delta chaining stations
	Avr Grade	-0.01%	from delta elevation on GPS dwgs
Good	Equiv Dis	7975'	using CE205[ed]=dis(4-g)/4
1825'	Braking Dis	6150'	using CE205 =0.8333(vi^2) + 11.73(vi)

SEC 7 - PASSENGER REDUCE

			79 mph		7975'	using CE205 =0.75(vi^2-vf^2) + 11.73(vi)
Good	3550'	Reduce to	40 mph	in	4425'	for diverging move over #20/15 switch
Good	2525'	Reduce to	15 mph	in	5450'	for diverging move over #10/8 switches

NOTES:

track design speed between Intermediate signal 669 and CP 68.4 = 79 MPH
speed restriction from 3577+81 to 3587+62= 35 MPH
speed restriction from 3589+87 to 3604+47= 35 MPH
speed restriction from 3607+84 to 3606+84= 45 MPH
speed restriction from 3616+09 to 3620+09= 25 MPH

Data Entry

Sheet	2	
Direction	north	
From	Intermediate	
From	669	
To		
To	CP 68.4	
Pass Speed	79	
	Chaining	Elevation
Block Start	353356	598.6
Block End	361372	597.4

Formulas

Block Length	80^6
Avr Grade (Full Block)	-0.01497006
Pass Equ Dist (full)	7975
Pass G Formula (Full)	using CE205[ed]=dis(4-g)/4
Pass Braking (full)	6150
Pass Reduce to 40	4425
Pass Reduce to 15	5450

NOTES:

1. CONTRACTOR SHALL VERIFY BLOCK VALIDATION.

NOT FOR CONSTRUCTION

SERIES CSGPL-8 OF CSGPL-35

HDR Engineering, Inc.
8550 W Bryn Mawr Ave., Suite 900
Chicago, IL 60631
www.hdrinc.com

Burns
BURNS ENGINEERING, INC. | 215 979-7700
TWO COMMERCE SQUARE, 2001 MARKET ST, SUITE 600
PHILADELPHIA, PA 19103

ISSUE	DATE	DESCRIPTION

NICTD
NORTHERN INDIANA COMMUTER TRANSPORTATION DISTRICT
33 East Highway 12
Chesterton, Indiana 46304

WEST LAKE CORRIDOR
DYER TO HAMMOND, INDIANA

DESIGNED:	KT
DRAWN:	KT
CHECKED:	MJP
DATE:	07/21/17

NICTD - WEST LAKE CORRIDOR - MP WL 61.38 TO WL 69.18
SINGLE TRACK

BLOCK VALIDATION NORTH INT SIG 669 TO CP 68.4 SYSTEM

FILENAME	SHT_WL_CSIG_PLN_713	SHEET 116 OF 248
SCALE	AS NOTED	

PLOT DATE: 7/19/2017 9:36:08 PM
JKIELMA

Direction	NORTH		
Block Definition	CP 65.3	to	Intermediate 669
Chaining Station	3447+53	to	3533+56
Aspects	C /DC	to	C/A
	A/DA	to	R
	R/SS	to	

Data Entry

Sheet	3	
Direction	NORTH	
From		
From	CP 65.3	
To	Intermediate	
To	669	
Pass Speed	79	
	Chaining	Elevation
Block Start	344753	601.82
Block End	353356	598.6

Formulas

Block Length	8603
Avr Grade (Full Block)	-0.037428804
Pass Equ Dist (full)	8500
Pass G Formula (Full)	using CE205[ed]=dis(4-g)/4
Pass Braking (full)	6150
Pass Reduce to 40	4425
Pass Reduce to 15	5450

SEC 4 - PASSENGER STOP FULL BLOCK

	Speed	79 mph	project design speed
	Distance	8603'	delta chaining stations
	Avr Grade	-0.04%	from delta elevation on GPS dwgs
Good	Equiv Dis	8500'	using CE205[ed]=dis(4-g)/4
2350'	Braking Dis	6150'	using CE205 =0.8333(vi^2) + 11.73(vi)

SEC 7 - PASSENGER REDUCE			79 mph		8500'	using CE205 =0.75(vi^2-vf^2) + 11.73(vi)
Good	4075'	Reduce to	40 mph	in	4425'	for diverging move over #20/15 switch
Good	3050'	Reduce to	15 mph	in	5450'	for diverging move over #10/8 switches

NOTES:

track design speed between CP 65.3 & Intermediate signal 669= 79 MPH

NOTES:

1. CONTRACTOR SHALL VERIFY BLOCK VALIDATION.

JKOELLMA

PLOT DATE: 7/19/2017 9:36:19 PM

NOT FOR CONSTRUCTION

SERIES CSGPL-9 OF CSGPL-35

HDR Engineering, Inc.
8550 W Bryn Mawr Ave., Suite 900
Chicago, IL 60631
www.hdrinc.com

Burns
BURNS ENGINEERING, INC. | 215 979-7700
TWO COMMERCE SQUARE, 2001 MARKET ST, SUITE 600
PHILADELPHIA, PA 19103

ISSUE	DATE	DESCRIPTION

NICTD
NORTHERN INDIANA COMMUTER TRANSPORTATION DISTRICT
33 East Highway 12
Chesterton, Indiana 46304

WEST LAKE CORRIDOR
DYER TO HAMMOND, INDIANA

DESIGNED:	KT
DRAWN:	KT
CHECKED:	MJP
DATE:	07/21/17

NICTD - WEST LAKE CORRIDOR - MP WL 61.38 TO WL 69.18
SINGLE TRACK

BLOCK VALIDATION NORTH CP 65.3 TO INT SIG 669 SYSTEM

FILENAME	SHT_WL_CSIG_PLN_714	SHEET 117 OF 248
SCALE	AS NOTED	

Direction	north		
Block Definition	CP 64.9	to	CP 65.3
Chaining Station	3428+00	to	3447+53
Aspects	C DCAD	to	C/A DC/DA
	A DA	to	R/SS
	R/SS		

SEC 4 - PASSENGER STOP FULL BLOCK

	Speed	40 mph	project design speed
	Distance	1953'	delta chaining stations
	Avr Grade	-0.25%	from delta elevation on GPS dwgs
Good	Equiv Dis	1825'	using CE205[ed]=dis(4-g)/4
0'	Braking Dis	1825'	using CE205 =0.8333(vi^2) + 11.73(vi)

SEC 7 - PASSENGER REDUCE			40 mph		1825'	using CE205 =0.75(vi^2-vf^2) + 11.73(vi)
Good	1350'	Reduce to	40 mph	in	475'	for diverging move over #20/15 switch
Good	325'	Reduce to	15 mph	in	1500'	for diverging move over #10/8 switches

NOTES:

track design speed between CP 64.9 & CP 65.3= 79

not enough braking distance. AA aspect at Intermediate sig 669, A at CP 65.3, SS at CP 64.9

Data Entry

Sheet	4	
Direction	north	
From		
From	CP 64.9	
To		
To	CP 65.3	
Pass Speed	40	
	Chaining	Elevation
Block Start	342800	606.7
Block End	344753	601.82

Formulas

Block Length	1953
Avr Grade (Full Block)	-0.249871992
Pass Equ Dist (full)	1825
Pass G Formula (Full)	using CE205[ed]=dis(4-g)/4
Pass Braking (full)	1825
Pass Reduce to 40	475
Pass Reduce to 15	1500

NOTES:

1. CONTRACTOR SHALL VERIFY BLOCK VALIDATION.

NOT FOR CONSTRUCTION

SERIES CSGPL-10 OF CSGPL-35

JKELLMA

PLOT DATE: 7/19/2017 9:36:31 PM

HDR Engineering, Inc.
8550 W Bryn Mawr Ave., Suite 900
Chicago, IL 60631
www.hdrinc.com

Burns
BURNSENGINEERING, INC. | 215 979-7700
TWO COMMERCE SQUARE, 2001 MARKET ST, SUITE 600
PHILADELPHIA, PA 19103

ISSUE	DATE	DESCRIPTION

NICTD
NORTHERN INDIANA COMMUTER TRANSPORTATION DISTRICT
33 East Highway 12
Chesterton, Indiana 46304

WEST LAKE CORRIDOR
DYER TO HAMMOND, INDIANA

DESIGNED:	KT
DRAWN:	KT
CHECKED:	MJP
DATE:	07/21/17

NICTD - WEST LAKE CORRIDOR - MP WL 61.38 TO WL 69.18
SINGLE TRACK

BLOCK VALIDATION NORTH CP 68.4 TO CP 65.3 SYSTEM

FILENAME	SHT_WL_CSIG_PLN_715	SHEET 118 OF 248
SCALE	AS NOTED	

Direction	north		
	Intermediate		
Block Definition	633	to	CP 64.9.
Chaining Station	3347+28	to	3428+00
Aspects	C	to	C
	AA	to	A
	AD	to	DCAD/DA
	A	to	R/SS
	R		

Data Entry

Sheet	5	
Direction	north	
From	Intermediate	
From	633	
To		
To	CP 64.9.	
Pass Speed	79	
	Chaining	Elevation
Block Start	334728	618
Block End	342800	606.7

Formulas

Block Length	8072
Avr Grade (Full Block)	-0.139990089
Pass Equ Dist (full)	7775
Pass G Formula (Full)	using CE205[ed]=dis(4-g)/4
Pass Braking (full)	6150
Pass Reduce to 40	4425
Pass Reduce to 15	5450

SEC 4 - PASSENGER STOP FULL BLOCK

	Speed	79 mph	project design speed
	Distance	8072'	delta chaining stations
	Avr Grade	-0.14%	from delta elevation on GPS dwgs
Good	Equiv Dis	7775'	using CE205[ed]=dis(4-g)/4
1625'	Braking Dis	6150'	using CE205 =0.8333(vi^2) + 11.73(vi)

SEC 7 - PASSENGER REDUCE 79 mph 7775' using CE205 =0.75(vi^2-vf^2) + 11.73(vi)

Good	3350'	Reduce to	40 mph	in	4425'	for diverging move over #20/15 switch
Good	2325'	Reduce to	15 mph	in	5450'	for diverging move over #10/8 switches

NOTES:

track design speed between Intermediate signal 663 and CP 64.9= 79 MPH

speed restriction from 3337+35 to 3353+39= 60 MPH

NOTES:

1. CONTRACTOR SHALL VERIFY BLOCK VALIDATION.

NOT FOR CONSTRUCTION

SERIES CSGPL-11 OF CSGPL-35

JKOELLMA

PLOT DATE: 7/19/2017 9:36:43 PM

HDR Engineering, Inc.
8550 W Bryn Mawr Ave., Suite 900
Chicago, IL 60631
www.hdrinc.com

Burns
BURNS ENGINEERING, INC. | 215 979-7700
TWO COMMERCE SQUARE, 2001 MARKET ST, SUITE 600
PHILADELPHIA, PA 19103

ISSUE	DATE	DESCRIPTION

NICTD
NORTHERN INDIANA COMMUTER TRANSPORTATION DISTRICT
33 East Highway 12
Chesterton, Indiana 46304

WEST LAKE CORRIDOR
DYER TO HAMMOND, INDIANA

DESIGNED:	KT
DRAWN:	KT
CHECKED:	MJP
DATE:	07/21/17

NICTD - WEST LAKE CORRIDOR - MP WL 61.38 TO WL 69.18
SINGLE TRACK

BLOCK VALIDATION NORTH INT SIG 633 TO CP 64.9 SYSTEM

FILENAME	SHT_WL_CSIG_PLN_716	SHEET 119 OF 248
SCALE	AS NOTED	

Direction	north			
Block Definition	CP 61.9	to	Intermediate 633	
Chaining Station	3266+49	to	3347+28	
Aspects	C DC	to	C/AA/AD/A	
		to		
	A DA	to	R	
	R/SS	to		

SEC 4 - PASSENGER STOP FULL BLOCK

	Speed	79 mph	project design speed
	Distance	8079'	delta chaining stations
	Avr Grade	-0.04%	from delta elevation on GPS dwgs
Good	Equiv Dis	8000'	using CE205[ed]=dis(4-g)/4
1850'	Braking Dis	6150'	using CE205 =0.8333(vi^2) + 11.73(vi)

SEC 7 - PASSENGER REDUCE 79 mph 8000' using CE205 =0.75(vi^2-vf^2) + 11.73(vi)

Good	3575'	Reduce to	40 mph	in	4425'	for diverging move over #20/15 switch
Good	2550'	Reduce to	15 mph	in	5450'	for diverging move over #10/8 switches

NOTES: track design speed between CP 61.9 and Intermediate signal 633= 79 MPH

speed restriction from 3337+35 to 3353+39= 60 MPH

Data Entry

Sheet	6	
Direction	north	
From		
From	CP 61.9	
To	Intermediate	
To	633	
Pass Speed	79	
	Chaining	Elevation
Block Start	326649	621
Block End	334728	618

Formulas

Block Length	8079
Avr Grade (Full Block)	-0.037133309
Pass Equ Dist (full)	8000
Pass G Formula (Full)	using CE205[ed]=dis(4-g)/4
Pass Braking (full)	6150
Pass Reduce to 40	4425
Pass Reduce to 15	5450

NOTES:

1. CONTRACTOR SHALL VERIFY BLOCK VALIDATION.

NOT FOR CONSTRUCTION

SERIES CSGPL-12 OF CSGPL-35

JKIELLMA

PLOT DATE: 7/19/2017 9:36:54 PM

HDR Engineering, Inc.
8550 W Bryn Mawr Ave., Suite 900
Chicago, IL 60631
www.hdrinc.com

Burns
BURNS ENGINEERING, INC. | 215 979-7700
TWO COMMERCE SQUARE, 2001 MARKET ST, SUITE 600
PHILADELPHIA, PA 19103

ISSUE	DATE	DESCRIPTION

NICTD
NORTHERN INDIANA COMMUTER TRANSPORTATION DISTRICT
33 East Highway 12
Chesterton, Indiana 46304

WEST LAKE CORRIDOR
DYER TO HAMMOND, INDIANA

DESIGNED:	KT
DRAWN:	KT
CHECKED:	MJP
DATE:	07/21/17

NICTD - WEST LAKE CORRIDOR - MP WL 61.38 TO WL 69.18
SINGLE TRACK

BLOCK VALIDATION NORTH CP 61.9 TO INT SIG 633 SYSTEM

FILENAME	SHT_WL_CSIG_PLN_717	SHEET 120 OF 248
SCALE	AS NOTED	

Direction	North		
Block Definition	CP 61.5	to	61.9
Chaining Station	3248+31	to	3266+49
Aspects	C	to	C/AD
	AD	to	DCAD/DC/DA
	AA	to	A
	A	to	R/SS
	R/SS		

Data Entry

Sheet	7	
Direction	North	
From		
From	CP 61.5	
To		
To	61.9	
Pass Speed	40	
	Chaining	Elevation
Block Start	324831	622.9
Block End	326649	621

Formulas

Block Length	1818
Avr Grade (Full Block)	-0.104510451
Pass Equ Dist (full)	1750
Pass G Formula (Full)	using CE205[ed]=dis(4-g)/4
Pass Braking (full)	1825
Pass Reduce to 40	475
Pass Reduce to 15	1500

SEC 4 - PASSENGER STOP FULL BLOCK

	Speed	40 mph	project design speed
	Distance	1818'	delta chaining stations
	Avr Grade	-0.10%	from delta elevation on GPS dwgs
Failed	Equiv Dis	1750'	using CE205[ed]=dis(4-g)/4
-75'	Braking Dis	1825'	using CE205 =0.8333(vi^2) + 11.73(vi)

SEC 7 - PASSENGER REDUCE 40 mph 1750' using CE205 =0.75(vi^2-vf^2) + 11.73(vi)

Good	1275'	Reduce to	40 mph	in	475'	for diverging move over #20/15 switch
Good	250'	Reduce to	15 mph	in	1500'	for diverging move over #10/8 switches

NOTES: track design speed between CP 61.5 and CP 61.9= 79 MPH

not enough braking distance from CP 61.5 and CP 61.9. R aspect CP 61.5 SS at CP 61.9

NOTES:

1. CONTRACTOR SHALL VERIFY BLOCK VALIDATION.

NOT FOR CONSTRUCTION

SERIES CSGPL-13 OF CSGPL-35

HDR Engineering, Inc.
8550 W Bryn Mawr Ave., Suite 900
Chicago, IL 60631
www.hdrinc.com

Burns
BURNS ENGINEERING, INC. | 215 979-7700
TWO COMMERCE SQUARE, 2001 MARKET ST, SUITE 600
PHILADELPHIA, PA 19103

ISSUE	DATE	DESCRIPTION

NICTD
NORTHERN INDIANA COMMUTER TRANSPORTATION DISTRICT
33 East Highway 12
Chesterton, Indiana 46304

WEST LAKE CORRIDOR
DYER TO HAMMOND, INDIANA

DESIGNED:	KT
DRAWN:	KT
CHECKED:	MJP
DATE:	07/21/17

NICTD - WEST LAKE CORRIDOR - MP WL 61.38 TO WL 69.18
SINGLE TRACK

BLOCK VALIDATION NORTH CP 61.5 TO CP 61.9 SYSTEM

FILENAME	SHT_WL_CSIG_PLN_718
SCALE	AS NOTED

SHEET 121 OF 248

PLOT DATE: 7/19/2017 9:37:06 PM JKIELMA

Direction	south		
Block Definition	CP 61.9	to	CP 61.5
Chaining Station	3269+49	to	3251+31
Aspects			
	A DA	to	R/SS
	R		

SEC 4 - PASSENGER STOP FULL BLOCK

	Speed	40 mph	project design speed
	Distance	1818'	delta chaining stations
	Avr Grade	0.10%	from delta elevation on GPS dwgs
Good	Equiv Dis	1850'	using CE205[ed]=dis(6+g)/6
25'	Braking Dis	1825'	using CE205 =0.8333(vi^2) + 11.73(vi)

SEC 7 - PASSENGER REDUCE			40 mph		1850'		using CE205 =0.75(vi^2-vf^2) + 11.73(vi)
Good	1375'	Reduce to	40 mph	in	475'		for diverging move over #20/15 switch
Good	350'	Reduce to	15 mph	in	1500'		for diverging move over #10/8 switches

NOTES: track design speed between CP 61.5 and CP 61.9= 79 MPH

Best aspect at CP 61.5 is R into station

Data Entry

Sheet	1	
Direction	south	
From		
From	CP 61.9	
To		
To	CP 61.5	
Pass Speed	40	
	Chaining	Elevation
Block Start	326949	620.71
Block End	325131	622.6

Formulas

Block Length	1818
Avr Grade (Full Block)	0.103960396
Pass Equ Dist (full)	1850
Pass G Formula (Full)	using CE205[ed]=dis(6+g)/6
Pass Braking (full)	1825
Pass Reduce to 40	475
Pass Reduce to 15	1500

NOTES:

1. CONTRACTOR SHALL VERIFY BLOCK VALIDATION.

NOT FOR CONSTRUCTION

SERIES CSGPL-14 OF CSGPL-35

JKIELLMA

PLOT DATE: 7/19/2017 9:37:18 PM

HDR Engineering, Inc.
8550 W Bryn Mawr Ave., Suite 900
Chicago, IL 60631
www.hdrinc.com

Burns
BURNS ENGINEERING, INC. | 215 979-7700
TWO COMMERCE SQUARE, 2001 MARKET ST, SUITE 600
PHILADELPHIA, PA 19103

ISSUE	DATE	DESCRIPTION

NICTD
NORTHERN INDIANA COMMUTER TRANSPORTATION DISTRICT
33 East Highway 12
Chesterton, Indiana 46304

WEST LAKE CORRIDOR
DYER TO HAMMOND, INDIANA

DESIGNED:	KT
DRAWN:	KT
CHECKED:	MJP
DATE:	07/21/17

NICTD - WEST LAKE CORRIDOR - MP WL 61.38 TO WL 69.18
SINGLE TRACK

BLOCK VALIDATION SOUTH CP 61.9 TO CP 61.5 SYSTEM

FILENAME	SHT_WL_CSIG_PLN_719
SCALE	AS NOTED

SHEET 122 OF 248

Direction	south			
	Intermediate			
Block Definition	634	to	CP 61.9	
Chaining Station	3347+28	to	3269+49	
Aspects	AA	to	A	
	AD	to	DA	
	A	to	R/SS	
	R			

SEC 4 - PASSENGER STOP FULL BLOCK

	Speed	79 mph	project design speed
	Distance	7779'	delta chaining stations
	Avr Grade	0.03%	from delta elevation on GPS dwgs
Good	Equiv Dis	7800'	using CE205[ed]=dis(6+g)/6
1650'	Braking Dis	6150'	using CE205 =0.8333(vi^2) + 11.73(vi)

SEC 7 - PASSENGER REDUCE 79 mph 7800' using CE205 =0.75(vi^2-vf^2) + 11.73(vi)

Good	3375'	Reduce to	40 mph	in	4425'	for diverging move over #20/15 switch
Good	2350'	Reduce to	15 mph	in	5450'	for diverging move over #10/8 switches

NOTES:
track design speed between Intermediate signal 634 and CP 61.9 = 79 MPH
AA aspect Intermediate Sig 634, A at CP 61.9, R or SS at CP 61.5
speed restriction from 3353+39 to 3337+35: 60 MPH

Data Entry

Sheet	2	
Direction	south	
From	Intermediate	
From	634	
To		
To	CP 61.9	
Pass Speed	79	
Cut Speed		
CCP Time		
	Chaining	Elevation
Block Start	334728	618
Block End	326949	620.71

Formulas

Block Length	7779
Avr Grade (Full Block)	0.034837383
Pass Equ Dist (full)	7800
Pass G Formula (Full)	using CE205[ed]=dis(6+g)/6
Pass Braking (full)	6150
Pass Reduce to 40	4425
Pass Reduce to 15	5450

NOTES:

1. CONTRACTOR SHALL VERIFY BLOCK VALIDATION.

NOT FOR CONSTRUCTION

SERIES CSGPL-15 OF CSGPL-35

JKOELLMA

PLOT DATE: 7/19/2017 9:37:31 PM

HDR Engineering, Inc.
8550 W Bryn Mawr Ave., Suite 900
Chicago, IL 60631
www.hdrinc.com

Burns
BURNS ENGINEERING, INC. | 215 979-7700
TWO COMMERCE SQUARE, 2001 MARKET ST, SUITE 600
PHILADELPHIA, PA 19103

ISSUE	DATE	DESCRIPTION

NICTD
NORTHERN INDIANA COMMUTER TRANSPORTATION DISTRICT
33 East Highway 12
Chesterton, Indiana 46304

WEST LAKE CORRIDOR
DYER TO HAMMOND, INDIANA

DESIGNED:	KT
DRAWN:	KT
CHECKED:	MJP
DATE:	07/21/17

NICTD - WEST LAKE CORRIDOR - MP WL 61.38 TO WL 69.18
SINGLE TRACK

BLOCK VALIDATION SOUTH INT SIG 634 TO CP 61.9 SYSTEM

FILENAME	SHT_WL_CSIG_PLN_720	SHEET 123 OF 248
SCALE	AS NOTED	

Direction	south		
Block Definition	CP 64.9	to	Intermediate 634
Chaining Station	3433+30	to	3347+28
Aspects	C	to	AA/AD/A
	A	to	R
	R/SS	to	

Data Entry

Sheet	3	
Direction	south	
From		
From	CP 64.9	
To	Intermediate	
To	634	
Pass Speed	79	
	Chaining	Elevation
Block Start	343330	606.7
Block End	334728	618

Formulas

Block Length	8602
Avr Grade (Full Block)	0.131364799
Pass Equ Dist (full)	8775
Pass G Formula (Full)	using CE205[ed]=dis(6+g)\6
Pass Braking (full)	6150
Pass Reduce to 40	4425
Pass Reduce to 15	5450

SEC 4 - PASSENGER STOP FULL BLOCK

	Speed	79 mph	project design speed
	Distance	8602'	delta chaining stations
	Avr Grade	0.13%	from delta elevation on GPS dwgs
Good	Equiv Dis	8775'	using CE205[ed]=dis(6+g)/6
2625'	Braking Dis	6150'	using CE205 =0.8333(vi^2) + 11.73(vi)

SEC 7 - PASSENGER REDUCE			79 mph		8775'		using CE205 =0.75(vi^2-vf^2) + 11.73(vi)
Good	4350'	Reduce to	40 mph	in	4425'		for diverging move over #20/15 switch
Good	3325'	Reduce to	15 mph	in	5450'		for diverging move over #10/8 switches

NOTES:

track design speed between CP 64.9 and Intermediat signal 634 = 79P

speed restriction from 3353+39 to 3337+35: 60 MPH

NOTES:

1. CONTRACTOR SHALL VERIFY BLOCK VALIDATION.

JKOELLMA

PLOT DATE: 7/19/2017 9:37:43 PM

NOT FOR CONSTRUCTION

SERIES CSGPL-16 OF CSGPL-35

HDR Engineering, Inc.
8550 W Bryn Mawr Ave., Suite 900
Chicago, IL 60631
www.hdrinc.com

Burns
BURNS ENGINEERING, INC. | 215 979-7700
TWO COMMERCE SQUARE, 2001 MARKET ST, SUITE 600
PHILADELPHIA, PA 19103

ISSUE	DATE	DESCRIPTION

NICTD
NORTHERN INDIANA COMMUTER TRANSPORTATION DISTRICT
33 East Highway 12
Chesterton, Indiana 46304

WEST LAKE CORRIDOR
DYER TO HAMMOND, INDIANA

DESIGNED:	KT
DRAWN:	KT
CHECKED:	MJP
DATE:	07/21/17

NICTD - WEST LAKE CORRIDOR - MP WL 61.38 TO WL 69.18
SINGLE TRACK

BLOCK VALIDATION SOUTH CP 64.9 TO INT SIG 634 SYSTEM

FILENAME	SHT_WL_CSIG_PLN_721	SHEET 124 OF 248
SCALE	AS NOTED	

Direction	South		
Block Definition	CP 65.3	to	CP 64.9
Chaining Station	3453+32	to	3433+30
Aspects	C	to	C/A
	DCAD	to	DC/DA
	A/DA	to	R/SS
	R/SS		

Data Entry

Sheet	4	
Direction	South	
From		
From	CP 65.3	
To		
To	CP 64.9	
Pass Speed	79	
	Chaining	Elevation
Block Start	345332	601.99
Freight CCP		
Pass. CCP		
Block End	343330	606.7

Formulas

Block Length	2002
Avr Grade (Full Block)	0.235264735
Pass Equ Dist (full)	2075
Pass G Formula (Full)	using CE205[ed]=dis(6+g)/6
Pass Braking (full)	6150
Pass Reduce to 40	4425
Pass Reduce to 15	5450

SEC 4 - PASSENGER STOP FULL BLOCK

	Speed	79 mph	project design speed
	Distance	2002'	delta chaining stations
	Avr Grade	0.24%	from delta elevation on GPS dwgs
Failed	Equiv Dis	2075'	using CE205[ed]=dis(6+g)/6
-4075'	Braking Dis	6150'	using CE205 =0.8333(vi^2) + 11.73(vi)

SEC 7 - PASSENGER REDUCE			79 mph		2075'		using CE205 =0.75(vi^2-vf^2) + 11.73(vi)
Failed	-2350'	Reduce to	40 mph	in	4425'		for diverging move over #20/15 switch
Failed	-3375'	Reduce to	15 mph	in	5450'		for diverging move over #10/8 switches

NOTES: track design speed between CP 65.3 and CP 64.9= 79 MPH
not enough braking distance from CP 65.3 to 64.9 79 MPH to Stop
AA aspect Intermediate Sig 633, A at CP 65.3, R or SS at CP 64.9

NOTES:

1. CONTRACTOR SHALL VERIFY BLOCK VALIDATION.

JKIELLMA

7/19/2017 9:37:56 PM

PLOT DATE:

HDR Engineering, Inc.
8550 W Bryn Mawr Ave., Suite 900
Chicago, IL 60631
www.hdrinc.com

Burns
BURNS ENGINEERING, INC. | 215 979-7700
TWO COMMERCE SQUARE, 2001 MARKET ST, SUITE 600
PHILADELPHIA, PA 19103

ISSUE	DATE	DESCRIPTION

NICTD
NORTHERN INDIANA COMMUTER TRANSPORTATION DISTRICT
33 East Highway 12
Chesterton, Indiana 46304

WEST LAKE CORRIDOR
DYER TO HAMMOND, INDIANA

DESIGNED:	KT
DRAWN:	KT
CHECKED:	MJP
DATE:	07/21/17

NOT FOR CONSTRUCTION

SERIES CSGPL-17 OF CSGPL-35

NICTD - WEST LAKE CORRIDOR - MP WL 61.38 TO WL 69.18
SINGLE TRACK

BLOCK VALIDATION SOUTH
CP 65.3 TO CP 64.9
SYSTEM

FILENAME	SHT_WL_CSIG_PLN_722	SHEET	125 OF 248
SCALE	AS NOTED		

Direction	South		
	Intermediate		
Block Definition	670	to	CP 65.3
Chaining Station	3533+56	to	3453+32
Aspects	C	to	C
	AA	to	A
	AD	to	DCAD/DA
	A		R/SS
	R		

SEC 4 - PASSENGER STOP FULL BLOCK

	Speed	79 mph	project design speed
	Distance	8024'	delta chaining stations
	Avr Grade	0.04%	from delta elevation on GPS dwgs
Good	Equiv Dis	8075'	using CE205[ed]=dis(6+g)/6
1925'	Braking Dis	6150'	using CE205 =0.8333(vi^2) + 11.73(vi)

SEC 7 - PASSENGER REDUCE 79 mph 8075' using CE205 =0.75(vi^2-vf^2) + 11.73(vi)

Good	3650'	Reduce to	40 mph	in	4425'	for diverging move over #20/15 switch
Good	2625'	Reduce to	15 mph	in	5450'	for diverging move over #10/8 switches

NOTES:

track design speed between Intermediate signal 670 and CP 65.3 = 79 MPH

Data Entry

Sheet	5	
Direction	South	
From	Intermediate	
From	670	
To		
To	CP 65.3	
Pass Speed	79	
	Chaining	Elevation
Block Start	353356	598.6
Block End	345332	601.99

Formulas

Block Length	8024
Avr Grade (Full Block)	0.042248255
Pass Equ Dist (full)	8075
Pass G Formula (Full)	using CE205[ed]=dis(6+g)/6
Pass Braking (full)	6150
Pass Reduce to 40	4425
Pass Reduce to 15	5450

NOTES:

1. CONTRACTOR SHALL VERIFY BLOCK VALIDATION.

NOT FOR CONSTRUCTION

SERIES CSGPL-18 OF CSGPL-35

HDR Engineering, Inc.
8550 W Bryn Mawr Ave., Suite 900
Chicago, IL 60631
www.hdrinc.com

Burns
BURNS ENGINEERING, INC. | 215 979-7700
TWO COMMERCE SQUARE, 2001 MARKET ST, SUITE 600
PHILADELPHIA, PA 19103

ISSUE	DATE	DESCRIPTION

NICTD
NORTHERN INDIANA COMMUTER TRANSPORTATION DISTRICT
33 East Highway 12
Chesterton, Indiana 46304

WEST LAKE CORRIDOR
DYER TO HAMMOND, INDIANA

DESIGNED:	KT
DRAWN:	KT
CHECKED:	MJP
DATE:	07/21/17

NICTD - WEST LAKE CORRIDOR - MP WL 61.38 TO WL 69.18
SINGLE TRACK

BLOCK VALIDATION SOUTH INT SIG 670 TO CP 65.3 SYSTEM

FILENAME	SHT_WL_CSIG_PLN_723	SHEET 126 OF 248
SCALE	AS NOTED	

PLOT DATE: 7/19/2017 9:38:08 PM JKIELMA

Direction	south		
			Intermediate
Block Definition	CP 68.4	to	670
Chaining Station	3616+72	to	3533+56
Aspects	C	to	C/AD
	AD	to	DCAD/DC/DA
	A	to	R/SS
	R		

SEC 4 - PASSENGER STOP FULL BLOCK

	Speed	79 mph	project design speed
	Distance	8316'	delta chaining stations
	Avr Grade	0.06%	from delta elevation on GPS dwgs
Good	Equiv Dis	8400'	using CE205[ed]=dis(6+g)/6
2250'	Braking Dis	6150'	using CE205 =0.8333(vi^2) + 11.73(vi)

SEC 7 - PASSENGER REDUCE

			79 mph		8400'	using CE205 =0.75(vi^2-vf^2) + 11.73(vi)
Good	3975'	Reduce to	40 mph	in	4425'	for diverging move over #20/15 switch
Good	2950'	Reduce to	15 mph	in	5450'	for diverging move over #10/8 switches

NOTES:

track design speed between CP 68.4 and Intermediate signal 670= 79 MPH
speed restriction from 3608+84 to 3607+84: 45 MPH
speed restriction from 3604+47 to 3589+87: 35 MPH
speed restriction from 3587+62 to 3577+81: 35 MPH

Data Entry

Sheet	6	
Direction	south	
From		
From	CP 68.4	
To	Intermediate	
To	670	
Pass Speed	79	
	Chaining	Elevation
Block Start	361672	593.22
Block End	353356	598.6

Formulas

Block Length	8316
Avr Grade (Full Block)	0.064694565
Pass Equ Dist (full)	8400
Pass G Formula (Full)	using CE205[ed]=dis(6+g)/6
Pass Braking (full)	6150
Pass Reduce to 40	4425
Pass Reduce to 15	5450

NOTES:

1. CONTRACTOR SHALL VERIFY BLOCK VALIDATION.

JKIELMA

PLOT DATE: 7/19/2017 9:38:23 PM

HDR Engineering, Inc.
8550 W Bryn Mawr Ave., Suite 900
Chicago, IL 60631
www.hdrinc.com

Burns
BURNS ENGINEERING, INC. | 215 979-7700
TWO COMMERCE SQUARE, 2001 MARKET ST, SUITE 600
PHILADELPHIA, PA 19103

ISSUE	DATE	DESCRIPTION

NICTD
NORTHERN INDIANA COMMUTER TRANSPORTATION DISTRICT
33 East Highway 12
Chesterton, Indiana 46304

WEST LAKE CORRIDOR
DYER TO HAMMOND, INDIANA

DESIGNED:	KT
DRAWN:	KT
CHECKED:	MJP
DATE:	07/21/17

NOT FOR CONSTRUCTION

SERIES CSGPL-19 OF CSGPL-35

NICTD - WEST LAKE CORRIDOR - MP WL 61.38 TO WL 69.18
SINGLE TRACK

BLOCK VALIDATION SOUTH CP 68.4 TO INT SIG 670 SYSTEM

FILENAME	SHT_WL_CSIG_PLN_724	SHEET 127 OF 248
SCALE	AS NOTED	

Direction	south		
	N State Line		
Block Definition	CP 69.2	to	CP 68.4
Chaining Station	3665+30	to	3616+72
Aspects	DC	to	C/A
	DA	to	R/SS
		to	

Data Entry

Sheet	7
Direction	south
From	N State Line
From	CP 69.2
To	
To	CP 68.4
Pass Speed	50

	Chaining	Elevation
Block Start	366530	588.24
Block End	361672	593.22

Formulas

Block Length	4858
Avr Grade (Full Block)	0.102511322
Pass Equ Dist (full)	4925
Pass G Formula (Full)	using CE205[ed]=dis(6+g)/6
Pass Braking (full)	2675
Pass Reduce to 40	1275
Pass Reduce to 15	2300

SEC 4 - PASSENGER STOP FULL BLOCK

	Speed	50 mph	project design speed
	Distance	4858'	delta chaining stations
	Avr Grade	0.10%	from delta elevation on GPS dwgs
Good	Equiv Dis	4925'	using CE205[ed]=dis(6+g)/6
2250'	Braking Dis	2675'	using CE205 =0.8333(vi^2) + 11.73(vi)

SEC 7 - PASSENGER REDUCE			50 mph		4925'	using CE205 =0.75(vi^2-vf^2) + 11.73(vi)
Good	3650'	Reduce to	40 mph	in	1275'	for diverging move over #20/15 switch
Good	2625'	Reduce to	15 mph	in	2300'	for diverging move over #10/8 switches

NOTES:

track design speed between CP 69.2 and CP 68.4 = 50 MPH
IHBRR diamond through new turnout 25 MPH
speed restriction from 3651+03 to 3646+11: 25 MPH
speed restriction from 3639+01 to 3629+84: 25 MPH
speed restriction from 3620+09 to 361609: 25 MPH

NOTES:

1. CONTRACTOR SHALL VERIFY BLOCK VALIDATION.

JKOELLMA

PLOT DATE: 7/19/2017 9:38:38 PM

NOT FOR CONSTRUCTION

SERIES CSGPL-20 OF CSGPL-35

HDR Engineering, Inc.
8550 W Bryn Mawr Ave., Suite 900
Chicago, IL 60631
www.hdrinc.com

Burns
BURNS ENGINEERING, INC. | 215 979-7700
TWO COMMERCE SQUARE, 2001 MARKET ST, SUITE 600
PHILADELPHIA, PA 19103

ISSUE	DATE	DESCRIPTION

NICTD
NORTHERN INDIANA COMMUTER TRANSPORTATION DISTRICT
33 East Highway 12
Chesterton, Indiana 46304

WEST LAKE CORRIDOR
DYER TO HAMMOND, INDIANA

DESIGNED:	KT
DRAWN:	KT
CHECKED:	MJP
DATE:	07/21/17

NICTD - WEST LAKE CORRIDOR - MP WL 61.38 TO WL 69.18
SINGLE TRACK

BLOCK VALIDATION SOUTH
CP 69.2 TO CP 68.4
SYSTEM

FILENAME	SHT_WL_CSIG_PLN_725
SCALE	AS NOTED

SHEET **128 OF 248**